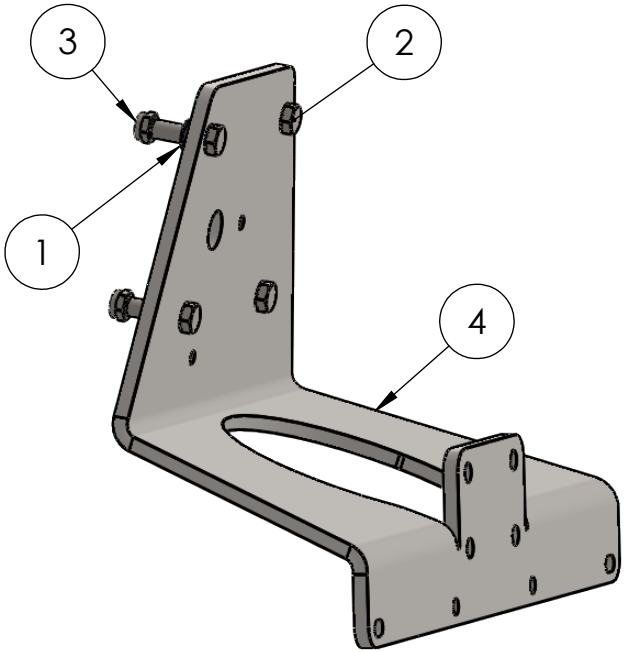

ITEM NO.	PART NUMBER	DESCRIPTION	QTY.
1	8222009	Facetskive	8
2	8222007	Sætskrue	4
3	1061042	Møtrik	4
4	815009	HL 152-242 Montage konsol	1
NS	GT-OPTE322	Fittings	1

MATERIAL: Se part tegning
FINISH:
WEIGHT: 11.50 Kilo
SURFACE:
UNLESS OTERWISE SPECIFIED:
TOLERANCE: DS/ISO 2768M
DIMENSIONS: MILLIMETERS
DESIGN BY:
DESIGN DATE:

REV.	DATE	SIGNATURE	DESCRIPTION
1	09-05-19	LU	

Green_Tec A/S Merkurvej 25
DK-6000 Kolding

PART DESCRIPTION: Adaptersæt

CASE: HXF2802 -HL 152/182/212/242

A4

DWG NO. OPTE 322.1