FLAIL MOWER
FR 92 - 162



HANDBOOK

ALL RIGHTS RESERVED BY GREENTEC.

THE ORIGINAL CONTENTS OF THE INSTRUCTION BOOK CREATED BY GREENTEC MAY NOT BE REPRODUCED, TRANSCRIBED OR TRANSLATED, WITHOUT WRITTEN PERMISSION FROM GREENTEC.

2021 – GREENTEC

UK

1. EDITION

GREENTEC

MADE IN DENMARK

Cutting Edge Technology

FLAIL MOWER
FR 92 – FR 112 – FR 122 – FR 162

INSTRUCTION MANUAL

1. EDITION – MARCH 2021
ORIGINAL EDITION

! IMPORTANT !

- This **GreenTec FR Flail Mower** must be mounted on an approved tool carrier such as GreenTec Scorpion **Boom Mower.**
- It is important that the operator is provided with both this instruction manual and the instruction manual for the tool carrier before the machine is used for the first time.
- It is important that the operator fully understands the contents before using the machine.
- This instruction manual must accompany the machine and must always be available to the operator.
- In the event of later resale of the machine, the instruction manual must accompany the new owner.
- The contents of the instruction manual are based on information, standards, and regulations applicable at the time of publication.
- As our products are constantly evolving and improving, there may be changes in specifications.
- If there is information that differs on the current machine, updated instructions can be found on our website or by contacting our Aftersales department.

MANUFACTURER, COMPANY NAME AND ANDRESS (a)

GREENTEC
Merkurvej 25
DK-6000 Kolding
Danmark

Tel: +45 75553644
Fax: +45 75554243

E-mail: info@greentec.eu
Webadresse: www.greentec.eu

PREFACE

Dear Customer!

Your new GreenTec machine is designed based on almost 30 years of experience with vehicle-mounted machines for maintenance of green areas.

The machine is manufactured based on the latest technology as well as approved safety regulations, standards, and regulations.

We want to make a product available in a way that does not cause damage or misunderstandings during use, during transport or during maintenance of the machine.

The instruction manual contains information and instructions that are important and useful for maintaining the GreenTec machine's operational safety, reliability, and value.

Therefore, read this instruction manual carefully as it will familiarize you with installation, use, care, and maintenance. Pay special attention to safety instructions!

You are welcome to visit our website www.grentec.eu - where you can find technical documentation and access the latest updates of instruction manuals and spare parts books on our entire product range.

We hope you enjoy your new GreenTec machine!



Kind regards

Signature: _____

John Christensen
Owner, GreenTec A/S

GreenTec's vision is to develop and sell quality machines for the maintenance of green areas, e.g., in agriculture, industry, airports and the municipal sector. Through innovative product development, we strive to become a leader in our field.

All machines are developed in a simple, functional, and production-friendly design in close collaboration with dealers and end users. It is our goal to identify all needs in the market segment with a minimum of 2 different solution proposals.

By in-depth analysis of requirements and serious consultancy, the customer must be offered the best possible solution, where individual needs can also be met through modular construction of the product program.

We also strive to offer the best possible aftersales service and a fast and efficient spare parts supply.

CONTENT

MANUFACTURER, COMPANY NAME AND ANDRESS (a) ..... A

PREFACE ..... B

TABLES AND FIGURES ..... F

DECLARATION OF CONFORMITY (c) 1

1. MACHINE DATA AND USEFUL INFORMATION (b) 2

1.1 REGISTRATION OF MACHINE DATA 2

1.2 MANUFACTURERS PLATE 3

1.3 WARRANTY 3

1.4 USE OF OTHER MANUFACTURERS OF TOOL CARRIERS 3

2. GENERAL INFORMATION 4

2.1 INSTRUCTIONS USING THIS MANUAL 4

2.2 DEFINITION OF INFORMATION SIGNS 4

2.3 DEFINITIONS, TERMS AND DESCRIPTIONS 4

3. SAFETY 5

3.1 LOCAL LEGISLATION IN THE COUNTRY OF USE 5

3.2 WARNINGS, PROHIBITIONS AND INSTRUCTIONS 5

3.3 SAFETY LABELLING 5

3.3.1 PERSONAL SAFETY EQUIPMENT– LABELS 5

3.3.2 WARNING LABELS 6

3.4 OPERATING IN PUBLIC AREAS 7

3.4.1 WARNING SIGNS IN PUBLIC AREAS 7

3.4.2 USE OF WARNING SIGNS 7

3.4.3 PROPOSED SIGNS WHEN OPERATING ON PUBLIC ROADS: 8

3.5 RECOMMENDATIONS FOR OPTIMAL SAFETY AND OPERATION (l) 9

3.6 NECCESARY PROTECTIVE MEASURES (m) 10

3.7 WARNINGS ON HOW NOT TO USE THE MACHINE (h) 11

3.8 SAFETY INSTRUCTIONS FOR MAINTENANCE, ADJUSTMENT, AND INSPECTION (s) 12

3.9 SAFETY INSTRUCTIONS FOR THE OWNER / OPERATOR 12

4. MACHINE DESCRIPTION, COMPONENTS AND SPECIFICATIONS 13
4.1 MACHINE DESCRIPTION (d) 13
4.2 USE OF THE MACHINE 15
4.2.1 INTENDED USE OF THE MACHINE (g) 15
4.2.2 APPLICATION AND RESTRICTIONS OF THE MACHINE (h) 15
4.3 MACHINE COMPONENTS / MAIN PARTS 16
4.3.1 MAIN FRAME 16
4.3.2 HYDRAULIC MOTOR WITH BELT DRIVE 16
4.3.3 DOUBLE SPIRAL ROTOR 17
4.3.4 REAR ROLLER 18
4.3.5 FLAILS 18
4.3.6 ADAPTER FOR TOOL CARRIERS 20
4.4 APPROVED TOOL CARRIERS (n) 20
4.5 OPTIONAL EQUIPMENT 21
4.5.1 MECHANICAL “QUICK-HITCH” (WITH SUPPORTING LEG) 21
4.5.2 QUICK COUPLING FOR HYDRAULIC CONNECTIONS 22
4.5.3 CONVEYER BELT (FLAIL MOWER FR 122B) 23
4.6 SPECIFICATIONS 25
4.7 MEASUREMENT OF AIRBORNE NOISE (u) 26
5. INSTRUCTIONS FOR USE OF THE MACHINE (k) 27
5.1 INSTRUCTIONS ON DELIVERY OF THE MACHINE 27
5.2 INSTRUCTIONS FOR MOUNTING AND CONNECTION (j) 27
5.2.1 PREPERATION OF THE VEHICLE 28
5.2.2 MOUNTING AND CONNECTION OF THE MACHINE (i) 28
5.2.3 MOUNTING OF FR FLAIL MOWER WITH “QUICK-HITCH” 29
5.2.4 STABILITY (o) 32
5.3 PREPARATION OF THE MACHINE FOR USE 34
5.3.1 INITIAL START UP AND OPERATION 34
5.3.2 PROCEDURES BEFORE OPERATING 34
5.4 OPERATING THE MACHINE (e) 34
5.4.1 TRAINING OF OPERATOR BEFORE USE 34

5.4.2 THE OPERATOR'S WORKPLACE (f) 34
5.4.3 TRANSPORTATION OF FR FLAIL MOWER ON TOOL CARRIERS (p) 35
5.4.4 DRIVING INSTRUCTIONS 36
5.4.5 SETTING AND ADJUSTING THE MACHINE (r) 37
5.4.6 STARTING UP FR FLAIL MOWER WITH A GREENTEC SCORPION BOOM MOWER: 39
5.4.7 TURNING OFF THE FR FLAIL MOWER ON THE GREENTEC SCORPION BOOM MOWER: 39
5.4.8 START-UP AFTER ACCIDENTAL STOP (q) 40
6. INSPECTION AND MAINTENANCE (e, r) 41
6.1 INSTRUCTIONS ON SAFE MAINTENANCE AND ADJUSTMENT (s) 41
6.2 DAILY AND ROUTINE MAINTENANCE (e) 42
6.3 TIGHTENING OF BOLTS AND HYDRAULIC CONNECTIONS 43
6.3.1 TIGHTENING OF BOLTS 43
6.3.2 TIGHTENING OF HYDRAULIC CONNECTIONS 44
6.4 HYDRAULIC HOSES 45
6.5 LUBRICATION OF THE FR FLAIL MOWER 46
6.6 ADJUSTMENT AND REPLACEMENT OF BELT ON FR FLAIL MOWER 47
6.7 REPLACING THE FLAILS ON THE FR FLAIL MOWER 51
6.8 REPLACING THE BEARINGS ON THE FR FLAIL MOWER 52
6.9 STORAGE OF THE MACHINE 52
6.10 DISPOSAL OF MACHINE / MACHINE PARTS: 53
7. TROUBLESHOOTING: FR FLAIL MOWER 54
7.1 TROUBLESHOOTING PROCEDURES 54

TABLES AND FIGURES

TABLES IN THIS INSTRUCTION MANUAL

TABLE 1 – MACHINES COVERED BY DECLARATION OF CONFORMITY: FR FLAIL MOWER....1

TABLE 2 – DECLARED INTERNATIONAL STANDARDS: FR FLAIL MOWER....1

TABLE 3 – MACHINE DATA FORM....2

TABLE 4 – CONTENTS OF THE MANUFACTURER'S PLATE....3

TABLE 5 – DEFINITIONS, TERMS, AND DESCRIPTIONS IN THE INSTRUCTION MANUAL....4

TABLE 6 – TYPES OF FLAILS: GREENTEC FR FLAILS MOWER....19

TABLE 7 – APPROVED TOOL CARRIERS: GREENTEC FR FLAIL MOWER....20

TABLE 8 – DATASHEET AND SPECIFICATIONS: FR FLAIL MOWER....25

TABLE 9 – MOUNTING, CONNECTION, AND DISCONNECTION OF FR FLAIL MOWER....30

TABLE 10 – DATA SHEET FOR HYDRAULIC CONNECTIONS....31

TABLE 11 – REAR ROLLER SETTINGS: GREENTEC FR FLAIL MOWER....37

TABLE 12 – FRONT SAFETY GUARD - ADJUSTMENT OPTIONS: GREENTEC FR FLAIL MOWER....38

TABLE 13 – CHECKLIST FOR DAILY INSPECTIONS BEFORE OPERATION: FR FLAIL MOWER....42

TABLE 14 – CHECKLIST FOR SEMI-ANNUAL INSPECTION - PREVENTIVE MAINTENANCE....43

TABLE 15 – TIGHTENING TORQUES FOR BOLTS: FR FLAIL MOWER....43

TABLE 16 – TIGHTENING TORQUES FOR HYDRAULIC FITTINGS: FR FLAIL MOWER....44

TABLE 17 – GUIDE FOR BELT ADJUSTMENT ON FR FLAIL MOWERS....50

TABLE 18 – OVERVIEW OF DISPOSAL / SCRAPPING OF MACHINE PARTS....53

TABLE 19 – IDENTIFICATIONS OF ERRORS: FR FLAIL MOWER....54

FIGURES IN THIS INSTRUCTION MANUAL

FIGURE 1 – MANUFACTURER'S PLATE FOR GREENTEC MACHINES....3

FIGURE 2 – SAFETY LABELLING: PERSONAL SAFETY EQUIPMENT....5

FIGURE 3 – SAFETY LABELING: WARNING LABELS....6

FIGURE 4 – PROPOSED SIGNAGE ON PUBLIC ROADS....8

DECLARATION OF CONFORMITY (c)

ACC. TO MACHINERY DIRECTIVE 2006/42/EC, ANNEX II.A

Manufacturer: **GreenTec A/S**
Company Address: **Merkurvej 25**
Zip code and city: **DK-6000 Kolding**

We, GreenTec, declare under all responsibility that the machine:

TYPE:	PRODUCT:	CAN BE MOUNTED ON:
Flail Mower	FR 92	Scorpion 430 * Twiga Compact
	FR 112	Scorpion 430 * Twiga Compact
	FR 122	Scorpion 630 Scorpion 830 * Twiga Mid * Twiga Flex
	FR 162	Scorpion 630 Scorpion 830 * Twiga Mid * Twiga Flex

Table 1 – Machines covered by declaration of conformity: FR Flail Mower

has been manufactured in accordance with the Machinery Directives 2006/42 / EC and 2014/68 / EU of the European Parliament and of the Council with reference to the following standards associated with its design, construction, and production:

NAME:	DECRIPTION:
DS/EN ISO 12100:2011	Machine safety - General principles for design - Risk assessment and risk reduction
DS/EN 14120:2015	Safety of machinery - Guards - General requirements for the design and construction of fixed and movable guards
DS/EN ISO 4413:2010	Hydraulic fluid power – General rules and safety requirements for systems and their components.

Table 2 – Declared international standards: FR Flail Mower

The declaration is valid for the above equipment, up to and including the machine's connections, resp. suspension and stabilization, power transmission and electrical connection.

When connecting the above equipment to a vehicle and/or to tools other than those mentioned above, it is the responsibility of each owner and operator to ensure that the vehicle and the overall machine comply with the applicable requirements of relevant directives.

Date: 18.01.2020

Signature: _____

John Christensen
Co-owner GreenTec A/S

* **Not included in this manual! Contact the machine manufacturer for further information regarding use, installation, safety, and risk assessment**

1. MACHINE DATA AND USEFUL INFORMATION (b)

- Before the machine is used for the first time, the seller is responsible for ensuring that the buyer receives this instruction manual.
- The seller must also ensure that the buyer and operator fully understand the contents before using the machine.
- If the machine is resold, the instruction manual must be handed over to the new owner but must always follow the machine.
- The following fields are filled in, for use when ordering spare parts or other inquiries:

1.1 REGISTRATION OF MACHINE DATA

TO BE COMPLETED BY DEALERSHIP:	
Name:	
Serial number:	
Date of Delivery:	
Dealership:	
E-mail:	
Phone:	

Table 3 – Machine data form

GREENTEC

Merkurvej 25
DK 6000 Kolding
Danmark
Tel: +45 75553644
Fax: +45 75554243
E-mail: info@greentec.eu
Web: www.greentec.eu

DEALER STAMP:

1.2 MANUFACTURERS PLATE

All GreenTec machines are equipped with a manufacturer's plate.

The manufacturer's plate contains important information related to the machine, including a unique serial number used for identification.

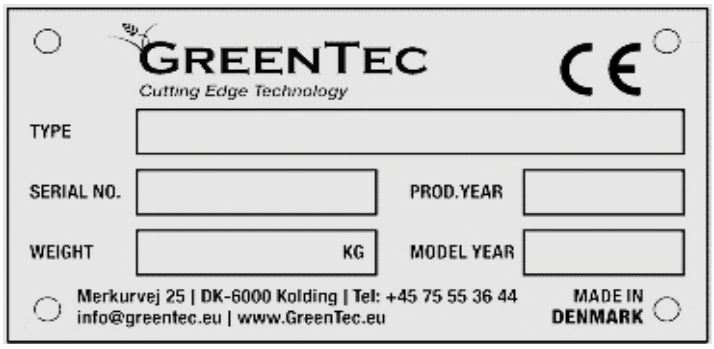

Figure 1 – Manufacturer's plate for GreenTec machines

CONTENT OF MANUFACTURER'S PLATE:	
Type:	Machine model and type number.
Serial No.:	The machines unique serial number.
Prod. year:	Production year of the machine.
Weight:	Weight *without* optional equipment. (kg)
Model year:	Development year of the machine.
	The plate also indicates the address information of the manufacturer.

Table 4 – Contents of the manufacturer's plate

1.3 WARRANTY

To maintain GreenTec's 2-year warranty and product liability insurance, only genuine GreenTec spare parts may be used on GreenTec machinery and equipment.

GreenTec is not liable for damage caused by illegal or incorrect use of the machine as well as incorrect connection or connected equipment.

See GreenTec's warranty conditions in section 5 under the Terms and Conditions of Sale and Delivery here: https://greentec.eu/en/terms-and-conditions-sale-and-delivery/

1.4 USE OF OTHER MANUFACTURERS OF TOOL CARRIERS

NOTICE

When mounting on tool carriers other than GreenTec's, a new risk assessment of the machine must be submitted.

If the machine is mounted on an unapproved tool carrier, the risk assessment basis lapses, and thereby the validity and guarantee of the declaration of conformity.

It is the responsibility of each operator to assess the risk of this interconnection before using the machine.

2. GENERAL INFORMATION

2.1 INSTRUCTIONS USING THIS MANUAL

Read this instruction manual carefully before mounting and commissioning the machine.
If in doubt, contact your local dealer or GreenTec - Aftersales department.

NOTICE

The illustrations in this instruction manual are for the sole purpose of instructing, informing, and substantiating the general procedures and instructions.

Illustrations may appear different from the current machine, e.g., by being fitted with accessories and / or in a different size variant.

2.2 DEFINITION OF INFORMATION SIGNS

The following definitions apply to this entire instruction manual:

⚠ DANGER

DANGER!
Warns of a potential situation that could result in death or permanent disabling injuries if the regulations are not followed carefully!

⚠ WARNING

WARNING!
Warns of a potential situation that could result in partially disabling injuries or serious bodily injury if the regulations are not followed carefully!

⚠ CAUTION

CAUTION!
Warns of a potential situation that could result in serious damage to the machine or equipment if the instructions are not followed carefully!

NOTICE

NOTICE!
Specific or general information that is deemed important or useful.

2.3 DEFINITIONS, TERMS AND DESCRIPTIONS

Operator:	Daily user and/or starter of the machine.
Owner:	Buyer, owner or those responsible for the operation and maintenance.
Attachment tool:	GreenTec FR Flail Mower, machine, or working tool handled and carried by tool carrier during operation
Tool carrier:	GreenTec Scorpion Boom Mower, support arm, or lift that controls, handles and carries the attachment tool during operation.
Vehicle:	Machine that transports tool carrier + attachment operation.
LH + RH:	Left Hand and Right Hand. These terms are used when the machine is mounted on the vehicle, seen from behind. These designations are also used when referring to the vehicle.
PTO:	Power Take Off-shaft from the vehicle to machine.

Table 5 – Definitions, terms, and descriptions in the instruction manual.

3. SAFETY

3.1 LOCAL LEGISLATION IN THE COUNTRY OF USE

The use of the machine may be restricted by the laws of the countries in which it is used.

It is important that the responsible owner and operator familiarizes himself with the country's laws and regulations regarding cutting, mowing and maintenance of fences and hedges.

3.2 WARNINGS, PROHIBITIONS, AND INSTRUCTIONS

The instructions derive from the current national accident prevention regulations, which the operator and operator must comply with:

⚠ WARNING	For all types of work on the machine, this must be disconnected from all hydraulics!
⚠ WARNING	Only authorized personnel may perform service work on the machine!
⚠ CAUTION	Read the instruction manual carefully before using the machine!

3.3 SAFETY LABELLING

The machine is affixed with safety labels, these are located at the identified hazards to which one is exposed, when working with, and staying near, the machine:

3.3.1 PERSONAL SAFETY EQUIPMENT– LABELS

It is recommended that the following safety equipment is used when working on or performing maintenance on the machine:



Figure 2 – Safety labelling: personal safety equipment

- The recommended safety equipment, together with the points of attention mentioned in this and the following sections, covers the precautions GreenTec has deemed necessary for use.
- The varying circumstances that may occur while working with this machine cannot always be foreseen.
- No good advice can replace "common sense", "timely care" and "paying attention", but the above recommendations are a good start to the safe use of the GreenTec machine.

3.3.2 WARNING LABELS

Warning labels that identify the dangers to which you are exposed when working and when staying near the machine:



Warning!

Read the relevant instruction manuals carefully before using this machine.

Follow all instructions and safety instructions when using the machine.



Warning!

Check for every 8 hours of use that all bolts / nuts are tightened.



Warning!

Beware of oil in case of skin contact or inhalation of oil vapors, as well as high pressure in case of leakage or handling.

Switch off the engine, remove the key and apply the parking brake before maintenance or repair work.



Warning!

The machine continues to rotate after stopping.

Keep a distance until the machine is completely stationary. Remember handbrake, and off engine.



Warning!

Danger of being hit by stones or other objects hit by the flails.

Persons must keep a distance from the machine when it is in operation.



Warning!

Bearings and couplings etc. can be damaged by persistent rain and weathering.



Warning!

There is a risk of crushing and collision when the machine is running.

Keep distance! No one may stay in the work zone during operation

Figure 3 – Safety labeling: warning labels

GREENTEC
Cutting Edge Technology

MADE IN DENMARK

3.4 OPERATING IN PUBLIC AREAS

When operating in publicly accessible areas, such as at roadside, the residence of others in the area must be considered.

Stop the machine immediately when e.g., pedestrians, cyclists, riders, etc. are approaching the safety zone. Only resume work when these are at a safe distance again.

When using the machine on public areas, the applicable traffic laws must be complied with at all events.

3.4.1 WARNING SIGNS IN PUBLIC AREAS

- The operating area should be marked with appropriate signage, this is a legal requirement in public areas.
- Signage must be clearly and correctly placed so that the danger is made clear.
- Contact the authorities for detailed information on current legislation.
- Road authorities should be advised before starting work on public roads.

3.4.2 USE OF WARNING SIGNS

- On two-way roads, warning signs are posted in both directions.
- The work should be within 1 km of signage.
- Only perform work when visibility is good and when the risk is low - e.g., outside rush hour.
- The vehicle must be equipped with a flashing orange light boom.
- Vehicles should be in a striking colour.
- Material debris should be removed from the road and sidewalk as soon as practicable, and at appropriate intervals.
- The work must be carried out before removing warning signs and the operator must wear visible clothing.
- Collect all road signs as soon as the work is completed.

3.4.3 PROPOSED SIGNS WHEN OPERATING ON PUBLIC ROADS:



HOLD LEFT

- **Command sign**
  - ”Hold left”
  - White and blue arrow sign
  - Sign visible on the back of the machine.



VERGE CUTTING

- **Warning sign:**
  - ”Road work”
  - Apply text for work performed with appropriate distance.
  - Example: ”*Verge cutting 0-1 km*”



ONE LANE ONLY

- **Warning sign:**
  - ”Road chicane”
  - Apply following text:
    - ”*One lane only*”

Figure 4 – Proposed signage on public roads

NOTICE

The above signage applies within EU mainland where traffic passes to the left of the machine working in the direction of travel.

Signage, use of, and colors on arrow signs as well as indications depend on the language, laws, and regulations of each country.

3.5 RECOMMENDATIONS FOR OPTIMAL SAFETY AND OPERATION (I)

DANGER

Always be aware of the following risks when using the machine!

To achieve optimal safety and operation, it is important that the operator understands how dangerous the machine is and anticipates the danger before it occurs:

- You may get stuck when the machine is engaged or disconnected and when the tool carrier is moved out or in, up or down and forward or back!
- The machine can tip over when the tool carrier is raised!
- You can be caught by the rotating shaft from the PTO!
- You may be hit or caught by the moving parts, e.g., flails, knives, drive shaft and wings from mounted attachment tools.
- You may be hit by flying materials or machine parts in case of machine damage!
- The machine can tip over, even when not in use!
- The attachment tools are powered by hydraulic oil from the hydraulic system in the machine or from the power-providing vehicle. The operator of the vehicle should have knowledge of how the hydraulic oil should be handled! (Read in the safety data sheet for the oil)
- High pressure oil spray from damaged fittings or hydraulic hoses can penetrate the skin and cause serious injury!
- Accident in case of collision with other vehicles or lost objects on the roads.



- *Always pay attention to overhead lines!*

  Between the electrical poles there will always be a risk of touching the overhead lines. If in doubt - contact the local power plant for safety distance instructions.

3.6 NECCESARY PROTECTIVE MEASURES (m)

NOTICE

The machine **must** be used in the following ways:

- ✓ Make sure that the operator of the machine has read this instruction manual, as well as instruction manuals for the tool carrier and used vehicle.
- ✓ Make sure that the operator of the machine has been instructed in the use of the machine.
- ✓ Wear hearing protection if the machine is operated from a cabin that is not soundproof or if the cabin windows are open.
- ✓ Make sure all warning labels are always visible and that none of them are missing, damaged or illegible.
- ✓ Check that all guards are fitted correctly and that there are no damaged or loose parts.
- ✓ Make sure that all hydraulic pipes and hoses are positioned correctly to avoid rubbing, stretching, squeezing, or breaking them.
- ✓ Check the work area and remove any strings, poles, large stones, and other dangerous objects before operation.
- ✓ Drive at a safe speed adapted to the terrain as well as any other vehicles and obstacles.
- ✓ Make sure that the vehicle is stable and meets the machine manufacturer's recommendations for minimum weight - if necessary, use extra counterweight.
- ✓ Pay attention to electric wires, if in doubt about distance contact local power plant.
- ✓ It is recommended to use impact-resistant guards on the vehicle.
- ✓ Check that the machine's fittings, connections, and couplings are in good condition.
- ✓ Follow the manufacturer's instructions for removing and installing the machine from the vehicle.
- ✓ Disconnect the hydraulics for the machine, stop the engine, apply the parking brake, and remove the key before leaving the cab.
- ✓ If necessary, remove annoying residual material from the area.
- ✓ When inspecting, repairing or other work on the stationary machine, great care must be taken.
- ✓ Always wear gloves, safety shoes, safety glasses and appropriate tools to carry out the work.

3.7 WARNINGS ON HOW NOT TO USE THE MACHINE (h)

DANGER

Do not use the machine in the following ways!

- ✕ Do not operate the machine until the relevant instruction manuals have been read and understood!
- ✕ The operator must also be familiar with the operating handles according to the instruction manual for the connected tool carrier!
- ✕ Do not operate the machine if there are others within machine safety distances!
- ✕ Do not allow an inexperienced person to operate the machine unattended!
- ✕ Do not walk within the working area / safety zone of the machine. (Risk of injury!)
- ✕ Do not try to locate a leak in the hydraulics by hand, use a piece of cardboard instead!
- ✕ At no time should children be allowed to play on or near the machine!
- ✕ Do not perform any maintenance or adjustment without first removing the hydraulic pressure from the machine, lowering the tool carrier to the ground, stopping the vehicle's engine, applying the parking brake, and removing the key!
- ✕ Do not use and / or mount the machine on a vehicle that does not meet the manufacturer's specifications!
- ✕ Do not use the machine if the hydraulic system shows signs of damage!
- ✕ Do not stop the engine while the hydraulic pressure is activated!
- ✕ Do not attempt to use the machine for any purpose other than that for which it was intended!
- ✕ Do not leave the cab of the vehicle without removing the ignition key!
- ✕ Do not transport the machine while the hydraulic pressure is activated!
- ✕ Do not use a machine that is not maintained or if some of its guards are missing or damaged!
- ✕ Do not operate the vehicle or any of the control levers from a position other than the driver's seat!
- ✕ Do not drive with mounted machines where rotating parts are facing the cab of the vehicle, as this poses a risk of stones and material being thrown at the driver!

3.8 SAFETY INSTRUCTIONS FOR MAINTENANCE, ADJUSTMENT, AND INSPECTION (s)

NOTICE

The machine **must** be maintained in the following ways:

- The operator must ensure that all maintenance, inspection, and installation work is carried out by authorized and qualified professionals who, after reading the relevant instruction manuals, are in possession of sufficient knowledge.
- Maintenance, inspection, and installation work may only be carried out with the hydraulics disconnected.
- When carrying out maintenance work under the tool carrier, secure with suitable support elements.
- When replacing machines, check the hydraulic system for residual pressure.
  A possible residual pressure is reduced to zero. (0 bar)
- Use only suitable tools and wear heavy gloves, safety shoes and glasses.
- Handle the hydraulic oil and grease properly. Always be familiar with the safety data sheets.
- Immediately after completion of work, all safety and protection devices must be fitted and reactivated.

3.9 SAFETY INSTRUCTIONS FOR THE OWNER / OPERATOR

- It is important to familiarize yourself with all controls and equipment as well as their function before starting the work. If the work has only begun, it may be too late.
- Check the immediate area before starting and during operation of the work the machine must perform. (People, children, animals, or obstacles such as stones, fence posts, steel wire).
- Ensure adequate visibility and illuminated work area. The safety distance specified in the machine's instruction manual must be strictly observed.
- The operator's clothing must be tight. Avoid loose clothing.
- The operator must be fresh and rested before using the machine, as well as taking breaks in case of fatigue, to ensure their own and others' safety.
- The operator should ensure varying working positions and take frequent breaks to avoid musculoskeletal disorders.
- The operator must not leave the driver 's seat while driving.
- It is not permitted to "ride along" on the machine during transport and operation.
- When working on high-voltage power lines, additional distance and caution are required.

4. MACHINE DESCRIPTION, COMPONENTS AND SPECIFICATIONS

4.1 MACHINE DESCRIPTION (d)



GreenTec FR Slagleklipper

FR 92 – 112:



WORKING WIDTH: **MATERIAL:** **SPEED:** **WEIGHT:**

FR 122 – 162:



WORKING WIDTH: **MATERIAL:** **SPEED:** **WEIGHT:**

- The Flail Mower can be used for grass- and hedgemowing, where the machine's top competence is mowing of grass areas.

- The flail mower is therefore mainly used for mowing/cutting grass in ditches, dikes and down slopes. Hedge or fence trimming of smaller materials up to 4 cm is also no challenge for this versatile machine.

- The FR Flail Mower is made up of invertible identical components, i.e. that the machine is mounted and then assembled, as standard as a right-facing model with a belt box and engine on the left side towards the vehicle.

    - Left-facing models can be mounted, e.g. where the tool carrier is mounted or facing the left side of the vehicle.

- The flail mower has been developed and optimized right down to the smallest details, whereby the total width of the cutting head has never been lower.

- The flail mower is available from 0.9 to 1.6 m working width, where you can easily navigate the vehicle and machine on smaller areas, such as bike paths, gardens and parks. At the same time, the machine is particularly suitable for contractors and farmers in larger green areas.

- The flail mower can be mounted on our Scorpion boom mowers for tractors, or directly on the arm of excavators.

- By mounting the flail mower on a boom/ arm-mower for a compact tractor, you can maintain a high forward speed of up to 7 km / h. It is also possible to mount the flail mower on mini excavators, which makes it somewhat slower.

- All GreenTec tools and machines are characterized by of the GreenTec logo and the name of the machine.

- The name and manufacturer will also always appear on the nameplate, which is located on all GreenTec machines.

- In addition, the machines are characterized by the bracket that assembles the machine with the tool carrrier
    - The bracket is available as standard as a bolt-on with 4 bolts, or as an option with a quick release bracket; where the "female part" is mounted on the FR Flail Mower while the "male part" is mounted on the tool carrier.
    - The machine can then be safely and easily picked up with the tool carrier.
    - The operator must then secure the assembly with 1 single bolt and connect the hydraulic outlets.



Standard mounting bracket with 4 bolts: GreenTec Scorpion Boom Mower (Standard equipment)

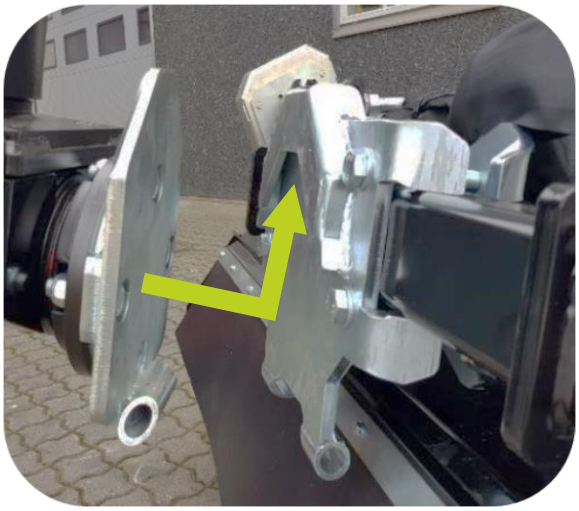

Pairing of machines using quick change ("male" and "female" part): GreenTec Scorpion Boom Mower + FR Flail Mower (Optional equipment)

4.2 USE OF THE MACHINE

4.2.1 INTENDED USE OF THE MACHINE (g)

NOTICE

For any use of the machine other than described in this section, GreenTec is not liable for any damages resulting therefrom.

The responsibility then lies solely with the operator.

- The FR Flail Mower is available in several variations and sizes, but they all have the same basic structure, and the operation is therefore the same.
- The machine is primarily used for mowing roadsides as well as for crushing small trees, shrubs, hedges, or fences. For the largest FR Flail Mower with the most powerful flails: branches up to 4 cm in thickness.
  - See specifications of the FR Flail Mower (Table 8 – page 21)

4.2.2 APPLICATION AND RESTRICTIONS OF THE MACHINE (h)

The capacity of the various FR Flail Mowers is limited by the size of the hydraulic motor, the pressure it is supplied with, the amount of material to be mowed and of course the speed at which it is driven.

⚠ DANGER

The owner of the machine / operator is responsible for ensuring that the following rules are observed!

- The vehicle on which the machine is mounted must meet the requirements for machines approved for agriculture.
- Under no circumstances should all safety values be exceeded.
  (Safety distances, pressure, flow, rpm, branch thickness, etc.)
- Never use the machine without safety guards fitted.
- The FR Flail Mower must never be used for the transport of persons, animals or other material than described in this instruction manual.
- The stability of the load-bearing vehicle is sufficient:

- See section on Stability – page 28-29, as well as the instruction manual for the tool carrier and vehicle used.

- The FR Flail Mower and tool carrier must never be used as a "crane" or other type of lifting equipment.

DANGER

The stone catcher can never work 100%!

Depending on the conditions being driven on and under, there will be a possibility that serious fragments / material may come flying and damage people or material. There must **always** be a distance!

4.3 MACHINE COMPONENTS / MAIN PARTS

4.3.1 MAIN FRAME

- Consists of body, sides, front stone catcher, (adjustable), rear stone catcher and adapter for the mount of the machine.
- All parts are bolted together and can be separated.
- The main frame is made of Strenx high-strength steel. The entire FR series is produced in Strenx 700 special steel for optimization of both weight and strength.

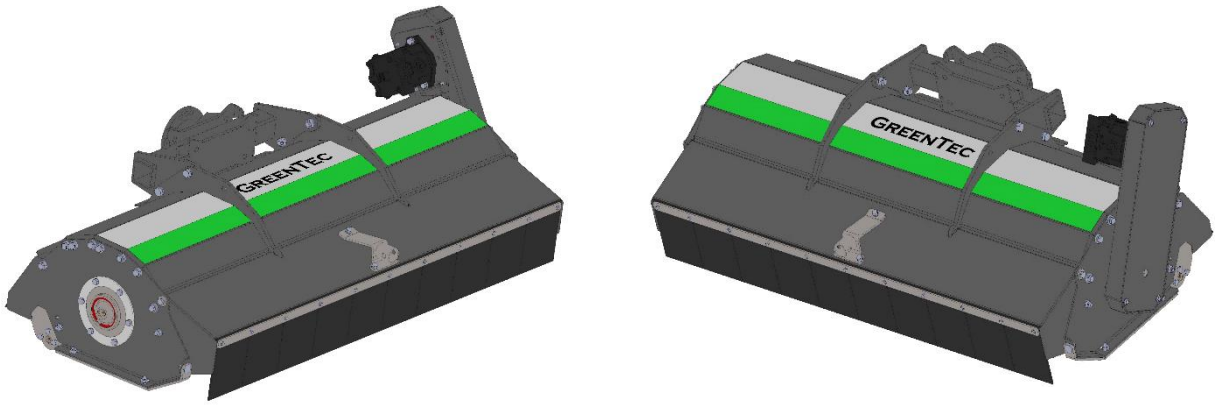

3D-illustration: GreenTec FR Flail Mower

4.3.2 HYDRAULIC MOTOR WITH BELT DRIVE

- Different engines for different performances, always adapted to the amount of oil available.
  - See FR Flail Mower Specifications. (Table 8– page 21)
- Powerbelt belt drive. Oversized and efficient transfer of energy from motor to rotor.
- The belt must be checked and adjusted / tightened.

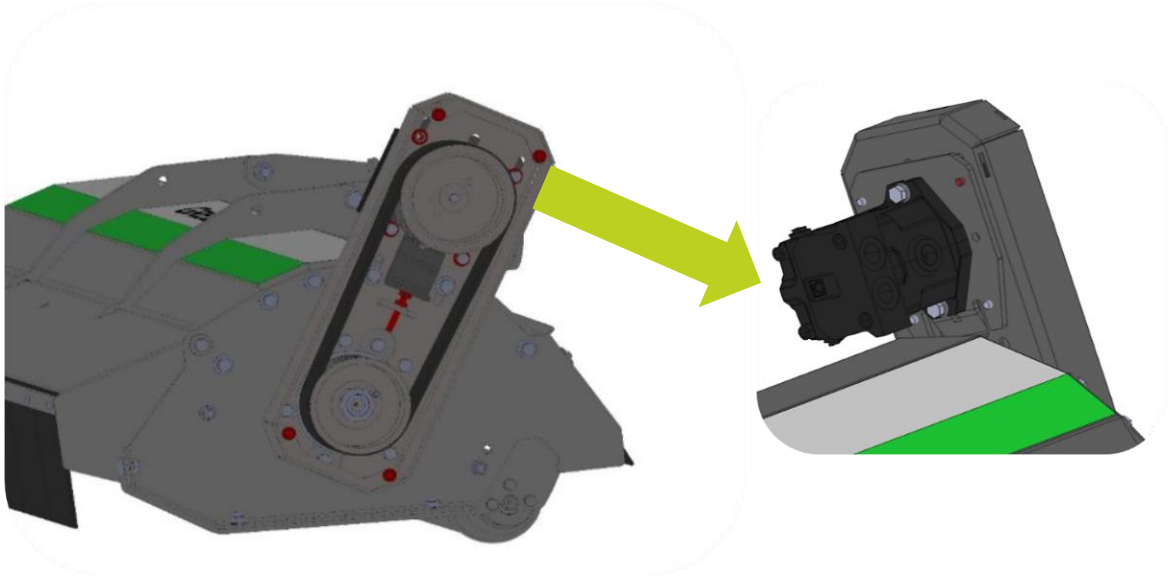

Hydraulic motor with Powerbelt belt drive.

4.3.3 DOUBLE SPIRAL ROTOR

- Optimized overall width as the main bearings are integrated in the rotor shaft.
- **Integrated Air Flow** quickly directs the cut material out of the cutting head.
- A natural suction occurs in front and overpressure behind the FR Slagleklipperen, so that the material is "sucked in" and "blown out" through the machine.

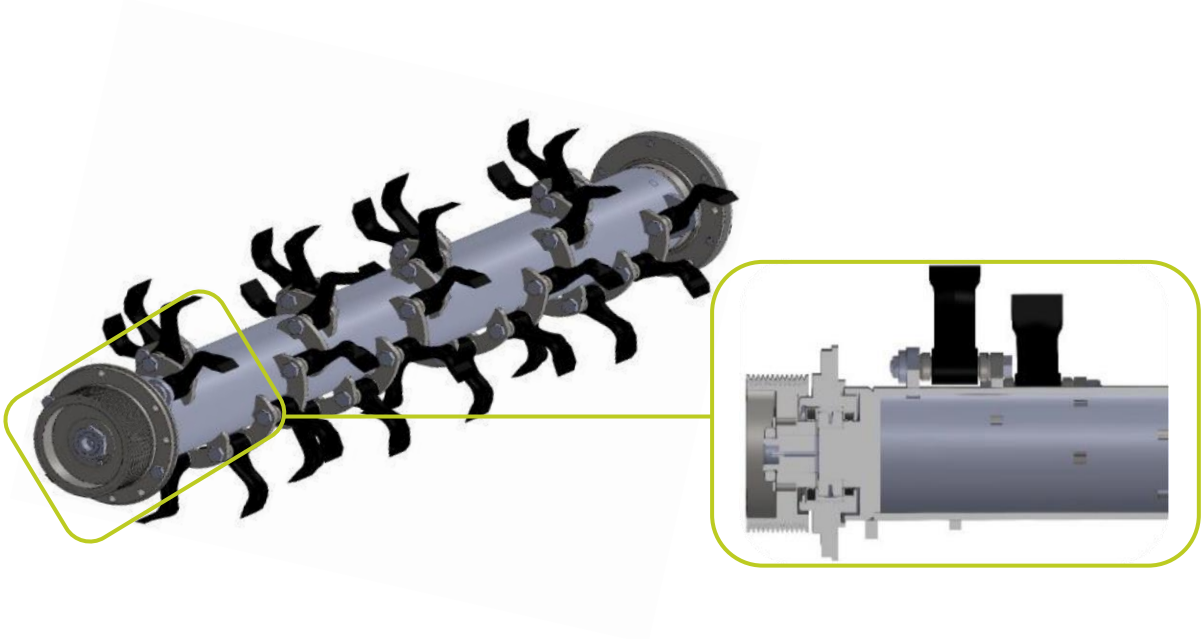

Double spiral rotor (2 flails always opposite each other) with bearings integrated in the main shaft.

4.3.4 REAR ROLLER

- The rear roller controls the height adjustment (cutting height) on the FR Slagleklipperen.
- 2 pcs. bolts must be dismantled and then the rear roller can be adjusted in 10 different heights:
  - (0 cm to 12 cm theoretically if the machine runs horizontally on level ground)
- 2 pcs. double-row ball bearings on both sides of the rear roller.
- The height adjustment of the rear roller rotates around the rotor, with equal distance to the strikers; in this way the rear roller is kept clean by the beaters, and there can be max. put 2.3 cm of soil on the back roll.

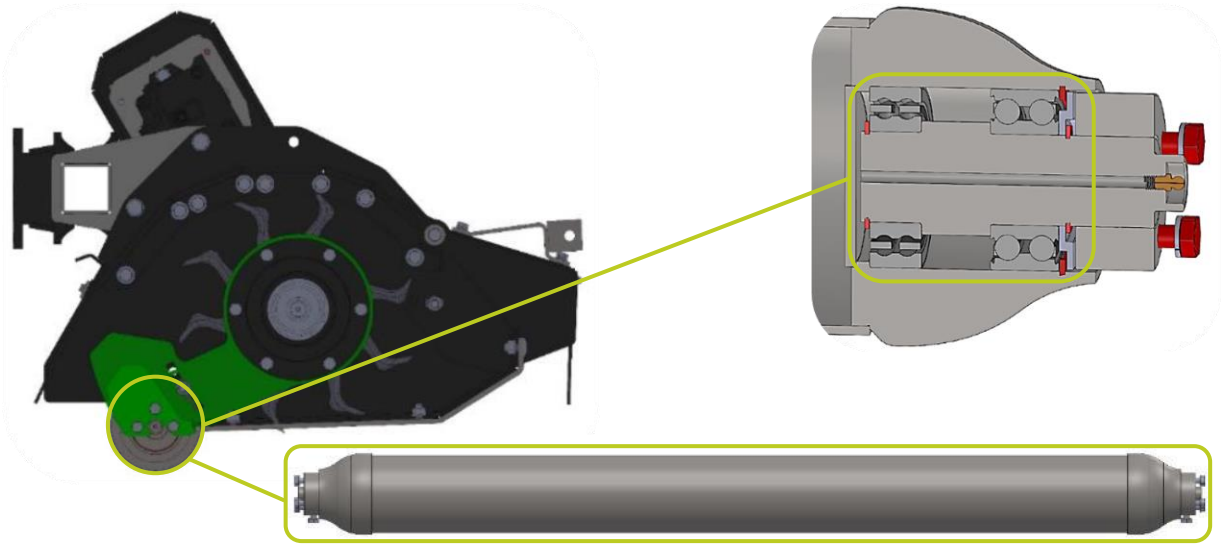

The height adjustment of the rear roller is mounted along the rotor shaft with 2 pcs. double-row ball bearings integrated in the rear roller.

4.3.5 FLAILS

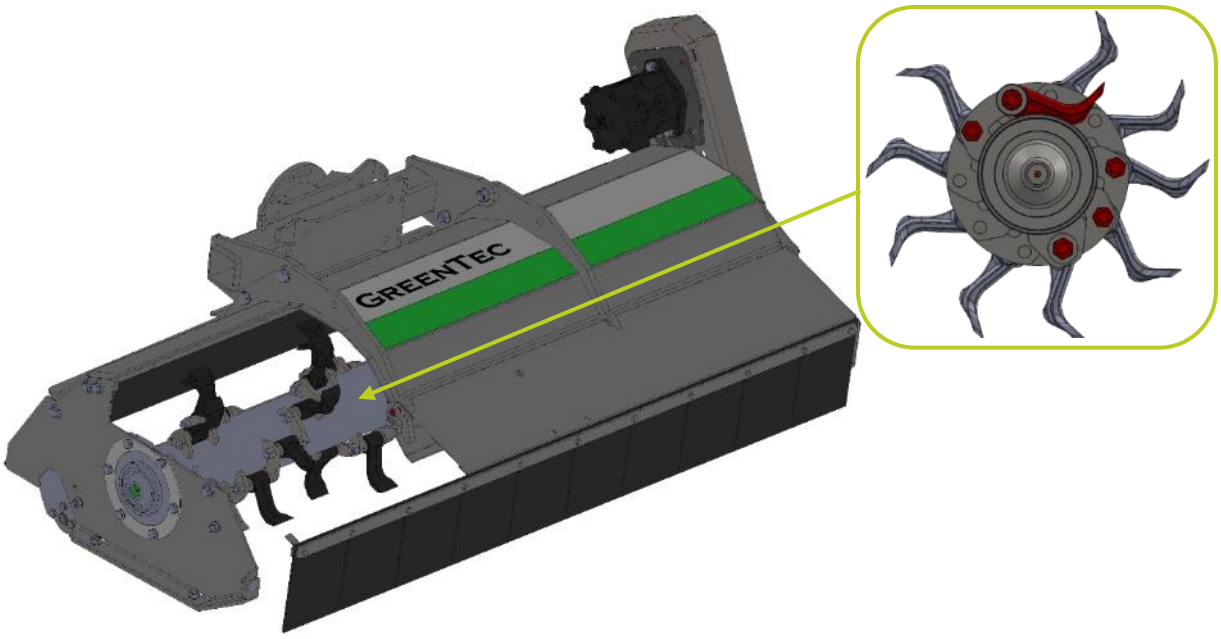

FR Flail Mower fitted with flails of the type "C-flails"

GREENTEC
Cutting Edge Technology
MADE IN DENMARK

FLAIL TYPES:		Used for	FR 92- 112	FR 122-162	
C-flail:		Mowing grass and bushes/shrubs	Small model: 45 mm	Large model: 45 mm	**Remember bushings!**
L-flail:		Mowing grass and stone filled bushes/shrubs	Small model: 45 mm	Large model: 55 mm	 **Remember bushings and shackles!**
T-flail:		Pruning of bushes/shrubs and branches, up to 40-50 mm	N/A	Large model: 55 mm	**Remember bushings!**
Y-flail:		Mowing grass and bushes/shrubs	Small model: 50 mm	Large model: 50 mm	 **Remember bushings and shackles!**

Table 6 – Types of flails: GreenTec FR Flails Mower

4.3.6 ADAPTER FOR TOOL CARRIERS

- The FR Flail Mower can be mounted on different types of tool carriers and multi carriers.
- In addition, there are various bolt-on and "quick-hitch" adapters that are mounted on the bracket in the middle of the FR Flail Mower:

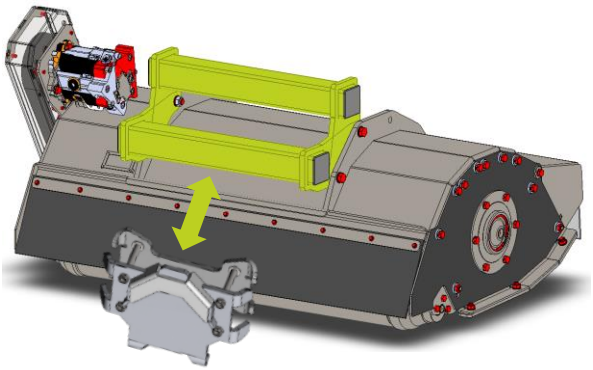

FR Flail Mower 122-162 with adapter for "quick-hitch" of the attachment tool. (Optional equipment)

The adapter and bracket shown, are used on GreenTec Scorpion Boom Mowers, but the bracket can also be turned and used for other types of tool carriers / multi carriers.

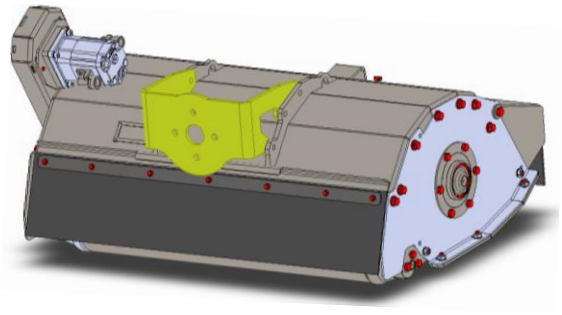

FR Flail Mower 92-112 with standard adapter / bolt-on: 4 bolts (Standard equipment)

This bracket is used as standard equipment on GreenTec Scorpion Boom Mowers.

- Always find an updated list of possible adapters / brackets on our website:
  - GreenTec FR 92-112
  - GreenTec FR 122-162

4.4 APPROVED TOOL CARRIERS (n)

⚠ WARNING

Remember that when mounting on tool carriers other than GreenTec produced or approved, it is the sole responsibility of each operator to ensure that the vehicle and the overall machine comply with the applicable requirements and relevant directives!

When mounting on tool carriers other than GreenTec, a new risk assessment of the equipment used must be submitted!

If the attachment tool is mounted on an unapproved tool carrier, the risk assessment basis lapses, and thus the validity and guarantee of the declaration of conformity!

GreenTec offers several different types of accessories, "quick-hitch", and adapters for mounting on other types of tool carriers.

The FR Flail Mower is intended for mounting on the following approved GreenTec tool carriers:

Description:	APPROVED TOOL CARRIERS:			
	FR 92	FR 112	FR 122	FR 162
Scorpion 4: (330 og 430)	●	●		
Scorpion 6: (530 og 630)			●	●
Scorpion 8: (730 og 830)			●	●
Optional equipment:				
Mechanical "quick-hitch" with supporting legs.		●		
Quick couplings for hydraulic connections.		●		

Table 7 – Approved tool carriers: GreenTec FR Flail Mower

GREENTEC Cutting Edge Technology
MADE IN DENMARK

4.5 OPTIONAL EQUIPMENT

4.5.1 MECHANICAL “QUICK-HITCH” (WITH SUPPORTING LEG)

- 4. pcs. bolts with associated washer and nuts.
- 1 pc. long locking bolt with nut and ring split + the "he"-part for the quick release.
- 1 pc. "she"-part that is mounted to the adapter on the FR Flail Mower
- The pictures show the standard mounting, but the angle can be adjusted and changed if the attachment tool need an extra turn.
- Mounted with 4 bolts, washers, and lock nuts. Bolts are cross tightened: See Table 15 – page 39.

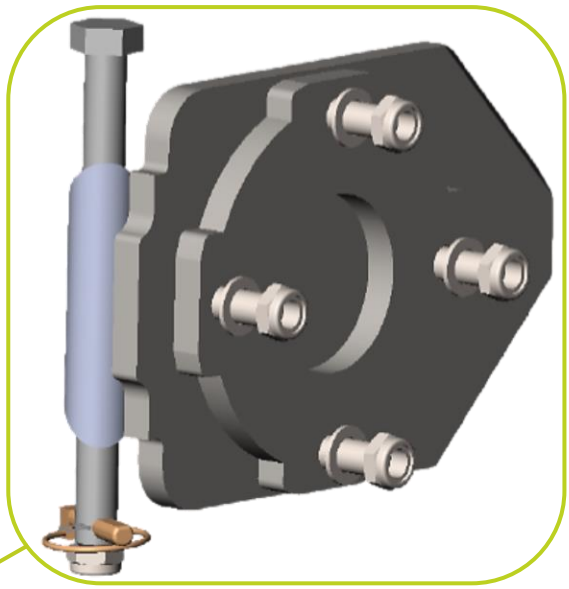

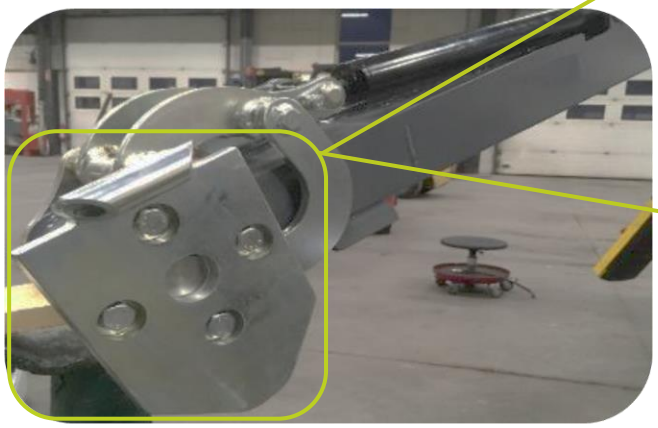

“Quick-hitch” mounted on a tool carrier at normal angle. (Note that the cylinder is completely contracted)

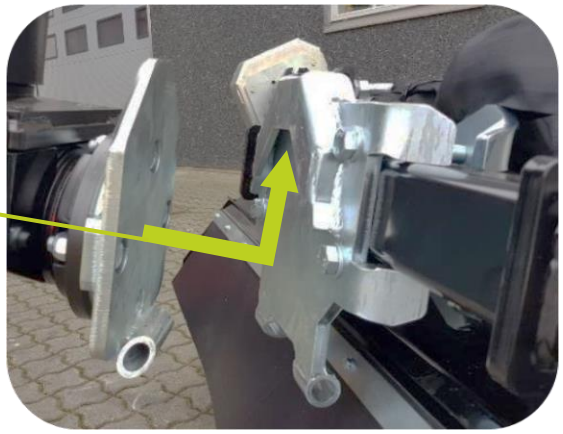

”Quick-hitch”: "Male part" (left) mounted on arm mower and "female" part (right) mounted via adapter on the attachment tool.

⚠ WARNING

Remember to retighten after the first 8-10 operating hours, as paint residues etc. may have disappeared, resulting in loose bolts!

- **SUPPORTING LEG**
  - When using an adapter and “quick-hitch” on the machine:
    - If the implement carrier does not have a controllable double swivel joint, or Auto Flex as on GreenTec Scorpion Plus-series[1], the FR Flail Mower must be fitted with an adjustable support leg to ensure that the machine is stable and horizontal when connecting to the “quick-hitch” of the attachment tool.



Mounting of supporting leg with “quick-hitch” of attachment tools

[1] Tool carriers – Plus-series: GreenTec Scorpion 630 PLUS, GreenTec Scorpion 830 PLUS

4.5.2 QUICK COUPLING FOR HYDRAULIC CONNECTIONS

⚠ WARNING

The quick couplings may only be fitted by professionals who have knowledge and understanding of hydraulic systems to avoid contamination of the environment, leaks and contamination of the closed hydraulic system!

- GreenTec recommends that hydraulic hoses are fitted with Flatface quick couplings when mounting and unmounting the attachment tool, as otherwise the hoses must be screwed together.
- At GreenTec, hydraulic quick couplings are always of the Flatface type.
- In this way, when compared with other types of quick couplings used for agriculture, the following is achieved:
  - Easier maintenance and cleaning
  - Higher flow



Quick couplings mounted on the attachment tools hydraulic hoses. (Optional equipment)

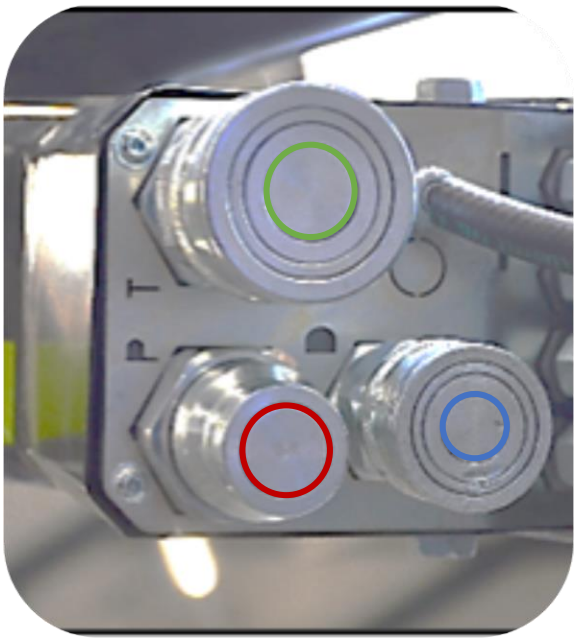

Connection for quick couplings installed on tool carrier. (The picture shows the stationary part for hydraulic connections on the GreenTec Scorpion Boom Mower)

- The hydraulic hoses on the FR Flail Mower are fitted with a metric thread on the fittings as standard.
- All fittings are marked with L (light series) or S (heavy series) + number that refers to strength class and thread size.
- On the FR Flail Mower, the hydraulic connections are clearly marked in blue, red, and green colour.
- Tightening torques for fittings can be found in Table 16 – page 40.

4.5.3 CONVEYER BELT (FLAIL MOWER FR 122B)

- GreenTec FR 122 Flail mower is available in a version with a mounted conveyer belt:
  FR 122B

- The belt ensures that the material being processed is "thrown" to the side using the flail head.

- FR122B is therefore particularly advantageous to use for maintenance along watercourse ditches and other places where it is desired that the material be thrown up from the bank of where it is cut.



The belt moves material away from the ditch and thereby protects, for example, the watercourse at the bottom of the ditch.

- The belt can be driven both ways, adjusted up and down and it is possible to adjust the belt's functions via an included control panel which is connected using a 12V-plug in the vehicle's cab:



Control panel for FR122B

ON / OFF

START / STOP CONVEYER BELT

ADJUST / TILT



”Speed Control”

Set the speed and direction of rotation of the belt.

- The belt can be further adjusted by manually adjusting the small shield on the side of the belt, to control the outcome of the material from the belt / mower head - the larger the opening the greater the “throw” of material:



4.5.4.1 CONNECTING FR122B TO ARM MOWER

NOTICE

When using the Flail Mower FR 122B, additional hydraulic hoses and sockets are required for connection to the Scorpion arm mower as well as an extra valve block for connection to the rest of the arm mower's hydraulic system.

The extra outlets and valve block are mounted on the Scorpion arm mower from factory, and the Flail Mower FR 122B can therefore only be ordered with a built Scorpion arm mower.

- On the Scorpion arm mower, 4x extra hydraulic outlets (Flatface quick couplings) are fitted from factory, to be able to use the conveyor belt's functions:

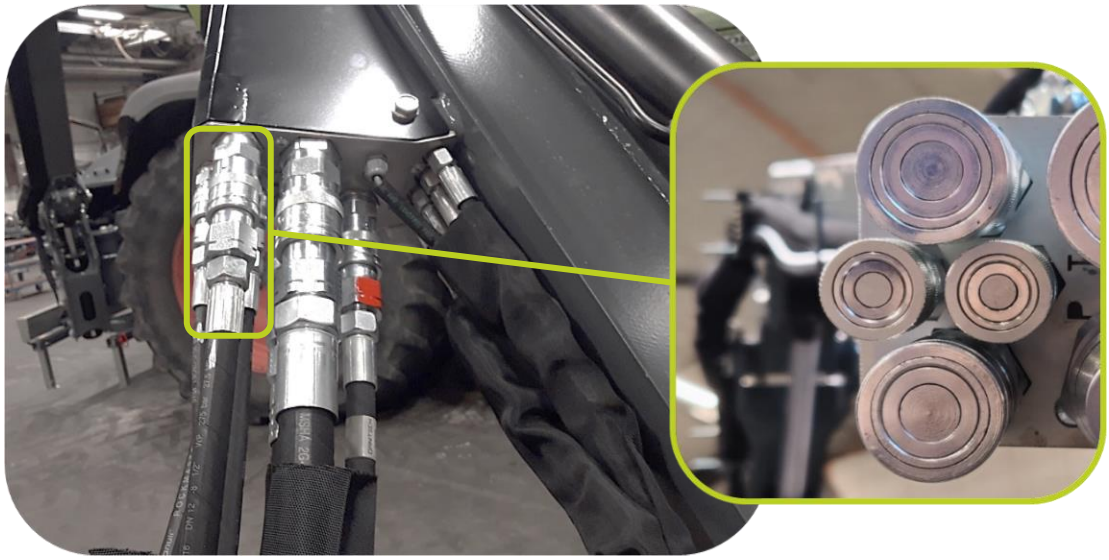

- 2 of the hydraulic outlets provide the hydraulic supply to the conveyor belt so that it can run in both directions using the control panel:

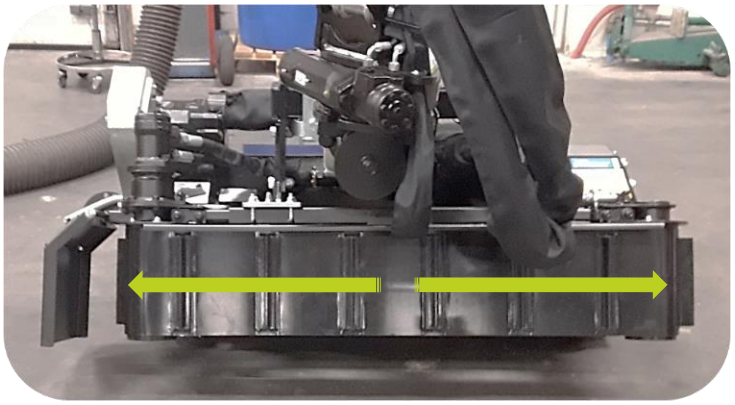

- 2 of the hydraulic outlets provide the hydraulic supply for the conveyor belt's lifting cylinders, so that it can be adjusted up / down using the control panel:

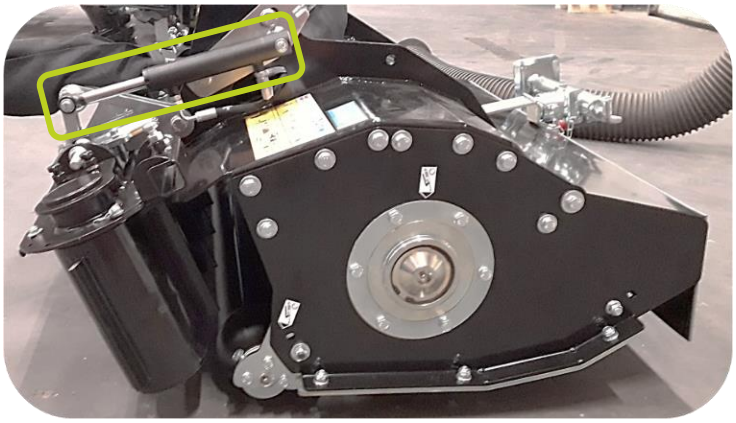

4.6 SPECIFICATIONS

DATA SHEET: FR FLAIL MOWER						
		FR 92	FR 112	FR 122 (FR 122B)	FR 162
Total width:		1085 mm	1305 mm	1420 mm	1830 mm
Total height:		544 mm	544 mm	679 mm	679 mm
Total lenght:		765 mm	765 mm	875 mm (905 mm)	875 mm
Working width (m):		0,9 m	1,1 m	1,2 m	1,6 m
Weight (kg):		138 kg	144 kg	320 kg (385 kg)	360 kg
A-weighted sound pressure level (>80dB):		82 dB	83 dB	85 dB	85 dB
Oil demand (l/min) (standard):		40 l/min		85 l/min	
Oil demand alternative (l/min) (extra option):		50 l/min			
Hydraulic oil (Tool carrier):		Shell Tellus S2 VX 46 or equivalent			
Bio-oil (extra option):		Shell Naturelle HF-E 46 or equivalent			
Oil outlet (1 double acting + 1 pressureless return (drain)):	Max. pressure	200 bar		230 / 315 bar	
	Return allowed pressure (min. / max.)	5 / 15 bar		5 / 15 bar	
	Drain allowed pressure (max.)	2 bar		2 bar	
Max. branch thickness (mm):	C-flails	20 mm		30 mm	
	L-flails	20 mm		40 mm	
	T-flails			40 – 50 mm	
	Y-flails	20 mm		20 mm	
Driving speed (up to) (km/h):		5-7 km/t		5-7 km/t	
Working season:		All year. Legislation in some countries can limit season.			
Hydraulic motor:	Gear (ccm)	17 ccm (2400 RPM)		30.5 ccm (2500 RPM)	
	Piston (ccm)			34 ccm (2250 RPM)	
Belt drive:	Tightening: New/existing (Nm)	950/750 Nm	950/750 Nm	1350/1020 Nm	1350/1020 Nm
Lubrication:	Amount / interval	5 tryk pr. 4 timer			
	Type	Texaco Multifak EP 2 lithium-fedt ell. tilsvarende. (Sikkerhedsdatablad)			
Rotor:	Diameter with flails	Max. Ø 400 mm			
	RPM (max. /min.)	2500 RPM		2800 RPM	
Flails:	C-flails (small)	24 pcs.	30 pcs.		
	L-flails (small)	24 pcs.	30 pcs.		
	T-flails (big)			28 pcs.	38 pcs.
	C-flails (big)			28 pcs.	38 pcs.
	L-flails (big)			28 pcs.	38 pcs.
	Y-Flails	48 pcs.	60 pcs.	56 pcs.	76 pcs.
Tightening of flail bolts:		79 Nm		218 Nm	
Size and strength class of flail bolts:		M10 / 10.9		M14 / 10.9	
Materials:		Mainly constructed of high-strength steel Strenx 700 Hydraulic hoses: Standard steel-reinforced rubber coated Hydraulic valves: Cast iron and aluminium.			

Table 8 – Datasheet and specifications: FR Flail Mower

4.7 MEASUREMENT OF AIRBORNE NOISE (u)

Noise measurements were performed on the machine under normal operating conditions at GreenTec A / S in Denmark, with a Delta OHM sound meter - type HD 8701.

Measurements were made 1 meter from the machines/tool carriers critical noise emitters at a height of 1.50 meters from the ground, without starting or using the attachment tool.

Noise level changes in relation to the season due to the material being worked on; therefore, noise levels may differ to a lesser extent. The noise level of the tool carrier will always be lower than the noise from the machine that can be mounted, as well as the noise from the vehicle in question.

Therefore, follow the precautions intended for the tool used. (See section about safety)

5. INSTRUCTIONS FOR USE OF THE MACHINE (k)

5.1 INSTRUCTIONS ON DELIVERY OF THE MACHINE

BEFORE USING THE MACHINE, MAKE SURE TO CHECK THE FOLLOWING:

1. Check the machine and all parts for transport damage.

2. Check that the following parts are included with the FR Flail Mower:
   - Instruction manual
   - (OPTIKRIK Tension Gauge)
   - Optional equipment
     - Mechanical “quick-hitch” with supporting leg.
     - Quick coupling for hydraulic connections.



GreenTec FR Flail Mower on transport pallet.

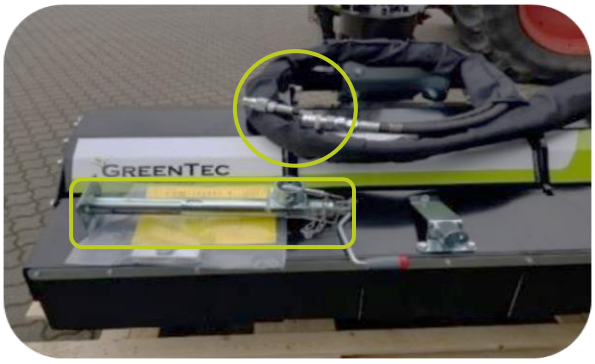

FR Flail Mower with hydraulic quick coupling and supporting leg for “quick-hitch”

5.2 INSTRUCTIONS FOR MOUNTING AND CONNECTION (j)

Mounting and connection should be performed by the dealer for the first time.

When the FR Flail Mower is mounted for the first time on the vehicle, it may in some cases be necessary to make simple adjustments, especially in relation to stabilization, which is easily performed by the dealer.

⚠ WARNING

Remember that when mounting and coupling the machine to other tool carriers other than GreenTec produced or approved, it is the sole responsibility of each operator to ensure that the vehicle and the overall machine comply with the applicable requirements and relevant directives!

When mounting on tool carriers other than GreenTec, a new risk assessment of the equipment used must be submitted!

If the attachment tool is mounted on an unapproved tool carrier, the risk assessment basis lapses, and thus the validity and guarantee of the declaration of conformity!

5.2.1 PREPERATION OF THE VEHICLE

- Before using the machine, it is important that the vehicle is properly prepared. This must be done both to achieve maximum safety and ensure optimal operation and stability of the vehicle.

- As extra safety, safety glass / windows (polycarbonate), safety nets and / or other protective devices can be fitted to the vehicle when used with our machines.

- In general, the driver of the vehicle should always wear safety equipment to reduce the risk of serious injury such as:
  - Eye protection: Mesh / visor (EN1731) and / or safety goggles (EN166)
  - Hearing protection (EN352), safety helmet (EN297), gloves and visible work clothes.

- If the vehicle does not have a cab, safety goggles / fenders, hearing protection and a helmet MUST be worn.
  - Bare skin should be protected with suitable thick clothing against the plant debris that may hit the driver of the vehicle. See section: Personal safety equipment – side 5

5.2.2 MOUNTING AND CONNECTION OF THE MACHINE (i)

⚠ WARNING

Installation and connection of the machine on a tool carrier must take place on a level and safe surface!

Great care must always be taken when attaching the tool carrier to the vehicle!

⚠ DANGER

Never use the machine and tool carrier on an unstable or unsuitable vehicle!

There must be no people or animals near the vehicle due to the risk of collision or overturning!

- The procedure may differ from tool carrier to tool carrier. Therefore, always use the used tool carrier's instructions and combine them with the FR Flail Mower's instructions.

- I In this instruction manual, it is shown how a FR Flail Mower is mounted and connected on a GreenTec Scorpion Boom Mower with “quick-hitch” as optional equipment.

- Mounting on other tool carriers takes place largely with the same procedure, but always check the procedure for the tool carrier in use.

- Depending on which adapter/bracket is used, these must be mounted as in the following pictures, and bolt must be tightened according to Table 15 – page 39.



Mount directly with 4 bolts on GreenTec Scorpion Boom Mower. (Standard equipment)



“He”-quick-hitch bracket mounted on GreenTec Scorpion Boom Mower. (Optional equipment)



“She” quick-hitch bracket mounted on GreenTec FR Flail Mower. (Optional equipment)

5.2.3 MOUNTING OF FR FLAIL MOWER WITH “QUICK-HITCH”

MOUNTING ON TOOL CARRIER:

1. Place the FR Flail Mower on a firm and stable surface, with good maneuvering space around the machine.



2. For attachment tools with “quick-hitch”, adjust the supporting leg, so that the FR Flail Mower stands horizontally.

   (Supporting leg not applicable for attachment tools, or tool carriers with controllable double swivel joint)

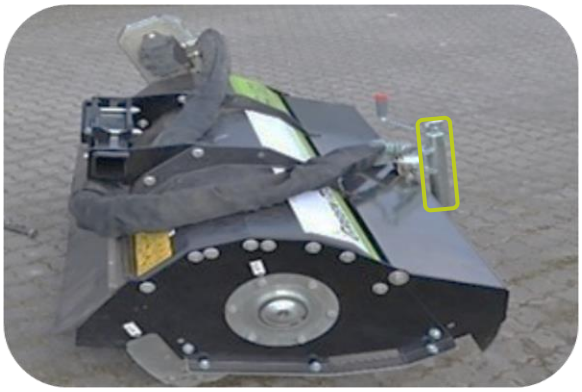

3. The the tool carrier's arm is led to the FR Flail Mowers adapter/bracket and the 2 machines are carefully hooked together.

   This is done either as shown via the “quick-hitch”, or by direct mounting via 4 bolts.



4. The “quick-hitch” is secured with a bolt.

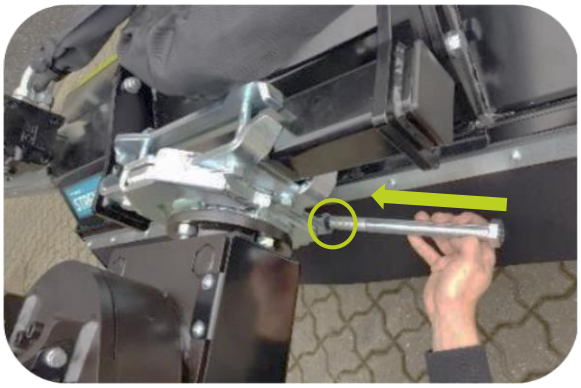

(Continued) →

5. Secure the “quick-hitch” and bolt with nut and safety split.

   The nut must not be fully tightened but MUST be secured with a safety ring split with lock.



MOUNTING OF HYDRAULIC CONNECTIONS:

⚠CAUTION

Remember to clean the couplings before mounting!

Always remember to turn the locks on quick couplings so that accidents do not occur!



6. Mount and tighten the 3 hydraulic hoses, according to Table 16 – page 40.

   - Drain hose (blue)
   - Pressure hose (red)
   - Return hose (green)



7. For quick coupling on hydraulic hoses:

   The 3 hydraulic couplings are secured by turning the lock knob to the right or left.





Table 9 – Mounting, connection, and disconnection of FR Flail Mower

GREENTEC Cutting Edge Technology

MADE IN DENMARK

DATA SHEET FOR HYDRAULIC CONNECTIONS: FR FLAIL MOWER

DRAIN: connected to drain socket on implement carrier.

DK: DRÆN UK: DRAIN D: LECK	DK: DRÆN UK: DRAIN D: LECK	DK: DRÆN UK: DRAIN D: LECK	DK: DRÆN UK: DRAIN D: LECK



- The smalles hose is for the DRAIN: marked in BLUE.
- The hose is connected to a pressureless (0 bar) tank connection.

⚠CAUTION

Drain hose **must not** be connected to RETURN!

- Drain pressure **must never** exceed **2.0 bar** at the engine.
- Failure to do so, will damage the hydraulic motor and void the warranty.

PRESSURE: connected to pressure outlet on the tool carrier.

DK: TRYK UK: PRESSURE D: DRUCK	DK: TRYK UK: PRESSURE D: DRUCK	DK: TRYK UK: PRESSURE D: DRUCK	DK: TRYK UK: PRESSURE D: DRUCK



- The mid-size hose is for the PRESSURE: marked in RED.

⚠CAUTION

Pressure specifications for the given motor should be observed!
(Table 8 – page 21)

RETURN: connected to return outlet on tool carrier.

DK: RETUR UK: RETURN D: RÜCKLAUF	DK: RETUR UK: RETURN D: RÜCKLAUF	DK: RETUR UK: RETURN D: RÜCKLAUF	DK: RETUR UK: RETURN D: RÜCKLAUF



- The biggest hose is for the RETURN: marked in GREEN.
- The hose is connected to the double-acting socket.
- Minimum pressure **5 bar** (If this pressure is not achieved, a non-return valve **must** be fitted (Item no.: CA19 / 4)
- Max. back pressure **15 bar** at the engine.

Table 10 – Data sheet for hydraulic connections.

5.2.4 STABILITY (o)

DANGER

After installation for the first time, it must be ensured that the complete vehicle is stable enough to be able to carry the tool carrier with the attachment tool mounted!

Especially that the vehicle is stable enough sideways when the attachment tool is working at great heights and hanging on the side of the vehicle and driving on an uneven surface, and / or in a turn!

NOTICE

The following suggestions are indicative of stability only and are not intended to enhance the stability of the complete vehicle.

It is recommended that the dealer of the vehicle is contacted for specific advice on increased stability.

At the same time, a tire specialist should be contacted for advice and guidance on tire pressure etc. for the vehicle and the tool carrier it is desired to mount the attachment on.

STABILITY CHECK:

CAUTION

Carefully examine the stability of the vehicle and tool carrier with the attachment tool mounted!

Slowly lower the tool carrier all the way out into low altitude. Let the attachment tool be max. ½ meters above the ground. (The FR Flail Mower must not be started under this control!)

- **Perform the following procedures:**

1. Slowly lower the tool carrier completely to a low height. Let the FR Flail Mower hang max. ½ meters above the ground.

2. Carefully swing the arm of the tool carrier around the entire moving area from backwards to forwards.

   a. Is the vehicle stable on all 4 wheels?
   b. Are the lift arms stable?

3. Is the vehicle stable when turning and driving around - even on uneven terrain?

4. This must be assessed in each individual situation, and it is the full responsibility of the owner and operator to ensure that the vehicle does not tip over. If the vehicle and tool carrier are stable, move the FR Flail Mower 1 meter up and down a few times.

5. If the operator considers that the tool carrier and the vehicle are not stable, the vehicle must be stabilized. (See the instruction manual for used tool carriers)

INCREASE STABILITY BY:

- Mounting counterweights on the tool carrier. (Optional equipment)
- Filling water into the tires of the vehicle.
  (Check-up with the tire manufacturer, and remember anti-freeze liquid at near or below freezing temperature)
- Track width of the vehicle; the longer the wheels are out, the greater the stability.
  (Check-up with the vehicle dealer)
- Stabilizer on the front axle, especially on the side mounted with the tool carrier.
  (Check-up with the vehicle dealer)

⚠ DANGER

It is very important that the operator understands the stability and that you always drive according to the conditions!

FACTORS THAT INFLUENCE STABILITY:

- The center of gravity of the machine. What height is being worked on, in combination with the weight hanging out on the side of the vehicle.
- Weight, counterweight, track width and vehicle wheelbase.
- Acceleration, braking, turning and the relative position of the machine during these maneuvers.
- Nature of the terrain: driving up, down or on a slope? What is the type of soil: soft, hard, or uneven?
- Pay special attention to the fact that articulated loaders shift the weight balance laterally the sharper they turn.

5.3 PREPARATION OF THE MACHINE FOR USE

After a complete mounting and connection of the FR Flail Mower to the tool carrier and the vehicle, the following daily inspections are carried out before operation: Daily and routine maintenance (e)

5.3.1 INITIAL START UP AND OPERATION

⚠CAUTION

Always start up carefully at first use, and only drive in a private area until familiarity with the use of the tool carrier with the tool fitted!

⚠CAUTION

GreenTec recommends running the machine at idle speed to heat the hydraulic oil before commissioning as it helps to spare the hydraulic components and significantly prolongs the life of both engine and pump!

5.3.2 PROCEDURES BEFORE OPERATING

- The operator of the machine must always have read and understood the instruction material.
- Vær sikker på at have gennemført alle punkter og procedurer i flg. afsnit:
  - Instructions for use of the machine (k)
  - Instructions for mounting and connection (j)
  - Daily and routine maintenance (e)

5.4 OPERATING THE MACHINE (e)

This section describes the handling of the FR Flail Mower, the operator's workplace when the machine is used, as well as the operation and use of the machine.

5.4.1 TRAINING OF OPERATOR BEFORE USE

- The FR Flail Mower may only be used mounted on a GreenTec Scorpion Boom Mower or a, by GreenTec approved, tool carrier as a single unit.
- The operator of the FR Flail Mower must therefore both review and understand this instruction manual as well as instruction manuals for tool carriers and vehicles before using the machine.
- The operator must be competent and fully capable of performing work with this machine in a safe and efficient manner before using the FR Flail Mower in a publicly accessible place.

⚠DANGER

The instructions must be fully understood before attempting to mount the attachment tool on the tool carrier.

If in doubt, contact your dealer or your GreenTec service department!

5.4.2 THE OPERATOR'S WORKPLACE (f)

- The FR Flail Mower must always be mounted on a tool carrier or multi carrier and therefore the tool is handled by operation of the chosen tool carrier.

NOTICE

Know and understand the operation of the vehicle and the tool carrier, to steer the attachment tool safely.

The operator's workplace is always the vehicle's driver's cab, where the tool carrier's control panel and joystick are located.

⚠ WARNING

The quick couplings may only be fitted by professionals who have knowledge and understanding of hydraulic systems to avoid contamination of the environment, leaks, and contamination of the closed hydraulic system!

- Much depending on how the location of the FR Flail Mower is in relation to the operator, these can be stressful working positions.
- It is important that the operator can follow and control the operation of the attachment tool, while being aware of the course of the road, traffic conditions, etc.
- These are many things at once, and often with a twist in the back of the operator. This can eventually strain the body's musculoskeletal system and it is recommended to take breaks.

5.4.3 TRANSPORTATION OF FR FLAIL MOWER ON TOOL CARRIERS (p)

- For the various tool carriers with different equipment, there are many options for placement during transport.
- Prepare transportation according to the applicable instruction manual for the used tool carrier and find the best possible location of the FR Flail Mower.



GreenTec Scorpion 6/8 PLUS with FR 162 in transport position



GreenTec Scorpion 4 with FR 92 in transport position

NOTICE

If driving on a public road, it is the operator's responsibility to comply with the applicable traffic law.

The attachment tool must not cover the lighting of either the vehicle or the tool carrier. Additional lighting may be required.

5.4.4 DRIVING INSTRUCTIONS

- The attachment tool must always be operated in the most appropriate way to obtain the best possible cut.

- It is important that the operator learns all the functions of the vehicle and on the tool carrier, as it is the tool carrier that must be controlled so that the best mowing result is achieved.

- The FR Flail Mower must be controlled and adjusted as follows:

1. The real roller follows the surface of the earth, in full working width.
2. The direction of travel is perpendicular to the axis of the rotor and rear roller.
   - The rear roller should not be pulled obliquely across the surface of the earth.
3. The rear roller is adjusted so that the cutting height is appropriate, in relation to the terrain.
   - Should be set at a height where the flails hit as little soil and rocks as possible.
4. The speed must be adjusted so that the mowing result is optimal, under normal conditions the speed will be max. be 5-7 km / h.
5. The front safety guard must be adjusted as far down as possible, in relation to the height and amount of material to be cut.

⚠ DANGER

The higher the front safety guards is set, the longer the stones and plant remains can be "shot" out in front, endangering people and vehicles in front of the mower.

Only use the machine where there is sufficient light, preferably during the day.

If this is not possible, extra lights should be fitted to the machine to ensure that the danger zone is fully illuminated.

Observe a safety distance of **min. 55 meters!** (See illustration below!)

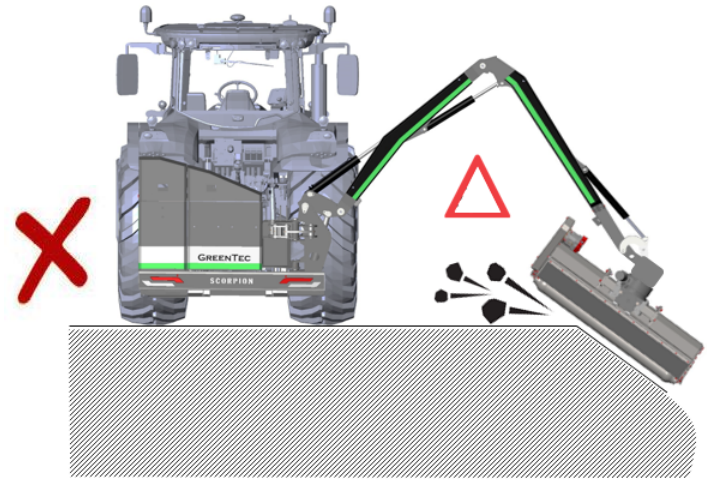

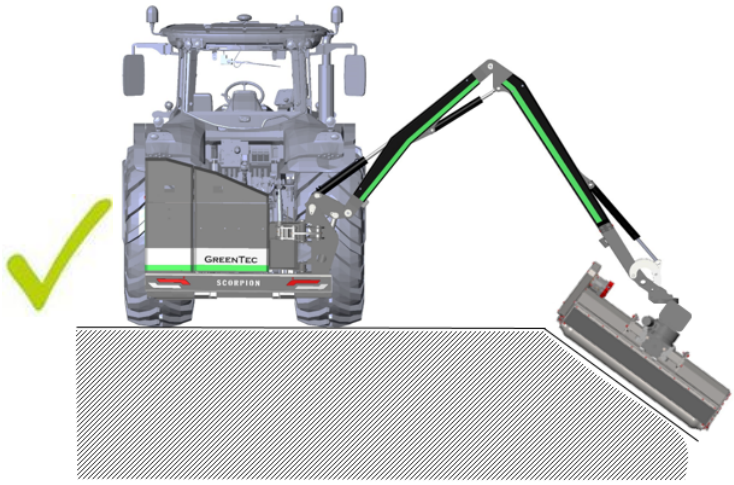

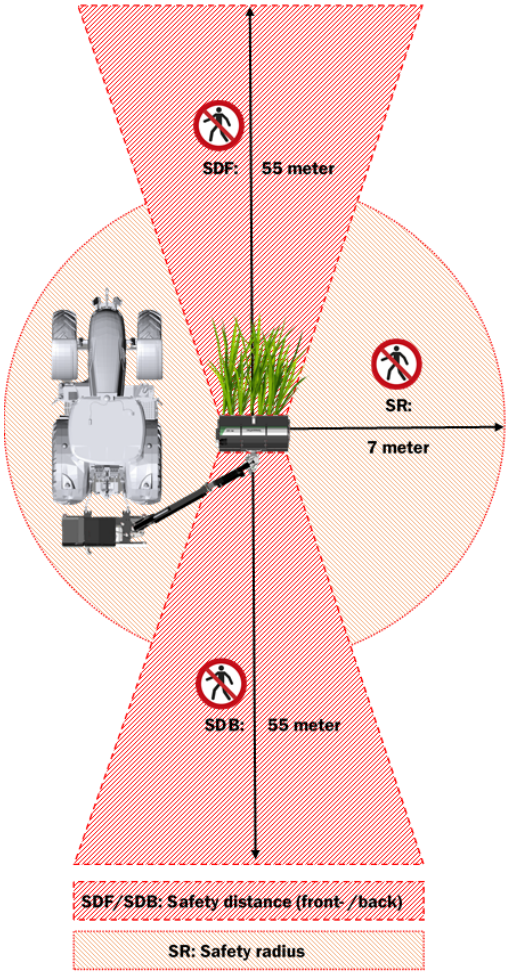

5.4.5 SETTING AND ADJUSTING THE MACHINE (r)

This section describes the setting and adjustment options on the tool. On a FR Flail Mower, the rear roller is adjusted to change the cutting height, while the front safety guards is adjusted to ensure that the cut material or stone is not "slid" out in front of the machine.

ADJUSTING THE REAL ROLLER FOR CUTTING HEIGHT:

- There are 2 round holes on the FR Flail Mower's frame / side plate, while on the rear roller's side bracket under the frame / side plate there are 5-6 square holes.
- This provides different settings/options for the cutting height, provided that the FR Flail Mower is horizontally forward in the direction of travel:

CUTTING HEIGHT ADJUSTMENT: FR FLAIL MOWER		
	FR 92 - 112	FR 122 - 162
Max. cutting height	9 cm	12 cm
Min. cutting height:	2 cm	1,5 cm
Adjustment options:	8	11
Interval between setting:	Approx. 0,8 cm	Approx. 1 cm

Table 11 – Rear roller settings: GreenTec FR Flail Mower

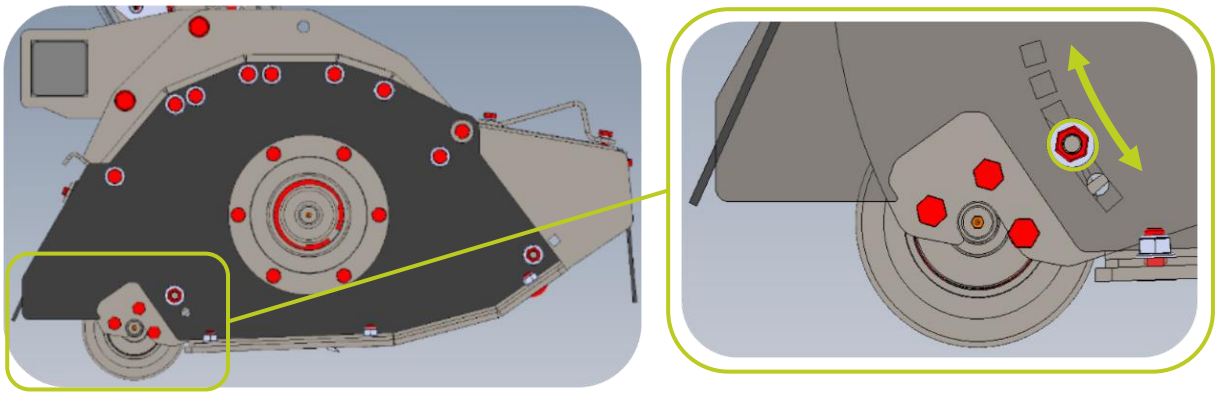

2 round holes in the frame (left), and 5-6 square holes on the rear roller side bracket (right)

- The side bracket of the rear roller has 1 pc. board bolt on both sides loosened.
- The bolts are then dismounted, and a new setting is found, after which the bolts are re-mounted.
- After adjustment, tighten the bolts according to Table 15 - page 39.

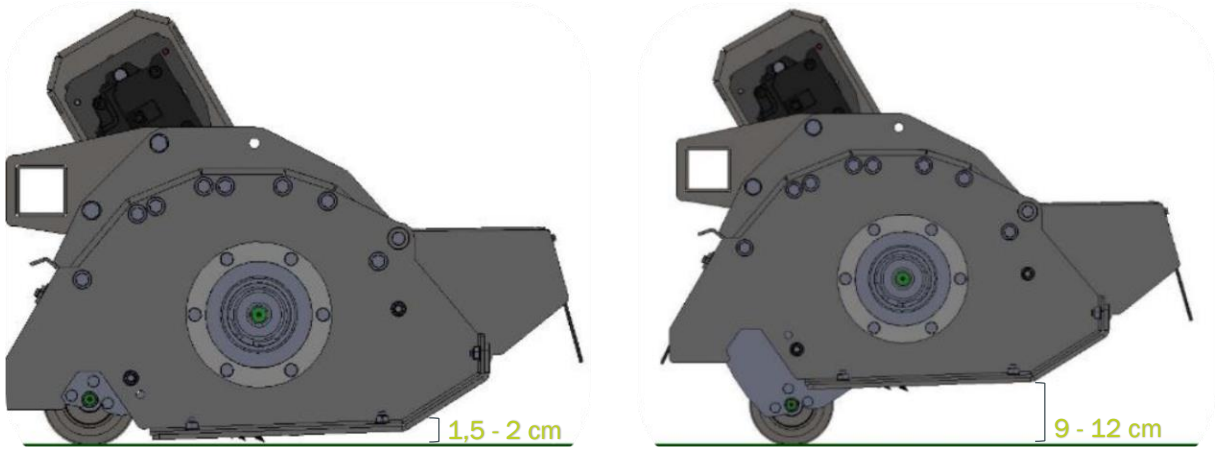

Setting the rear roller minimum height (left) and rear roller maximum height (right)

NOTICE

Depending on the terrain, the cutting height is adjusted to the appropriate height.

The more soil or stone that is hit with the flails, the greater the wear on the entire FR Flail Mower and especially on the flails.

Therefore, for very uneven or stone-filled terrain, higher cutting height is recommended than on even and stone-free terrain.

DANGER

If the rubber flaps are worn or cracked on the safety guards, they MUST be replaced!

ALWAYS use original rubber flaps to ensure adequate safety against stone and material!

ADJUSTING THE FRONT SAFETY GUARDS:

- The front safety guards are fitted with strong movable rubber flaps that effectively protect against drafts of stones and planar remains. It is important that they are kept as far down as possible, without preventing what is to be cut from getting into the mower.
- On each side of the FR Flail Mower's frame there is 2 holes, while on the front safety guard there is 7 square holes:

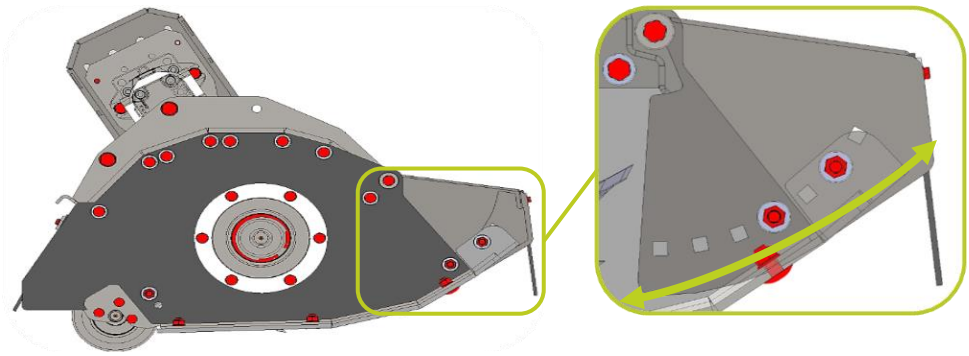

2 holes on the side of the frame (left), and 7 square holes on the side of the front safety guard (right)

*FR 122 from serial number 222302076 and older + FR 162 from serial number 222303025 and older, is fitted with shorter front shield and skids.

Reinforced front shield and extended skids are available as an update kit: FR 122 item no: 6702569 / FR 162 item no: 6702570

  - This provides 7 different adjustment options for the front safety guard:
    (The adjustment of the front safety guard takes place in the same way as when adjusting the rear roller.)

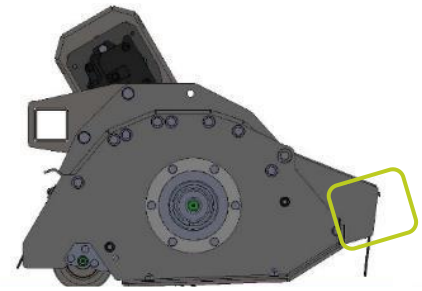

Front safety guard: Closed 5 cm.

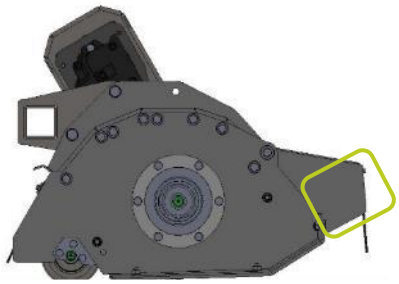

Front safety guard: Mid-position 9 cm.

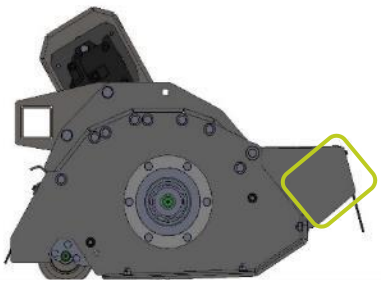

Front safety guard: Open 12-14 cm.

FRONT SAFETY GUARD ADJUSTMENT: FR FLAIL MOWER	
	FR 92 - 162
Max. setting:	12 cm
Mid. setting:	9 cm
Min setting:	5 cm

Table 12 – Front safety guard - adjustment options: GreenTec FR Flail Mower

5.4.6 STARTING UP FR FLAIL MOWER WITH A GREENTEC SCORPION BOOM MOWER:

- The attachment tool can be started as soon as the Scorpion Boom Mower is in working position (See instruction manual for Scorpion Boom Mower)
- The machine is started at low revs on the vehicle's PTO
- On the control panel of the GreenTec Scorpion Boom Mower - Press: 
- The LED lights up and the attachment tool starts running.
- Let the machine run without load or using it until the oil is heated.

NOTICE

A cold machine should run 10-15 minutes before greater load is required, to get warm and ready to work.

- When the machine is hot, find the correct PTO speed for the tool carrier in the section on starting up the machine, in the tool carrier's instruction manual.
- For GreenTec Scorpion Boom Mowers, refer to the section:
  "Initial start-up and driving with attachments"

5.4.7 TURNING OFF THE FR FLAIL MOWER ON THE GREENTEC SCORPION BOOM MOWER:

- The attachment tool is stopped at low revs on the PTO of the vehicle.
- On the control panel of the GreenTec Scorpion Boom Mower – Press: 
- The LED light stops, and the attachments tool stops running.

⚠ DANGER

Most implements have heavy rotors or blades, so the attachment tool will often rotate for up to 30 seconds after disconnecting the hydraulics!

⚠ DANGER

NEVER GO NEAR THE MACHINE BEFORE YOU ARE SURE THAT THE ROTATING PARTS ARE COMPLETELY STOPPED!

5.4.8 START-UP AFTER ACCIDENTAL STOP (q)

When using the machine, the operator must always pay special attention to avoid hitting:

- Bigger rocks.
- Tree stumps.
- Wire fence.
- Manhole covers.
- Dropped waste / garbage:
  - Plastic and other packaging.
  - Bicycles / scrap.

If there are signs of strong vibration or if there is an unintentional downtime following the above mentioned, the operator should do the following:

1. Stop the FR Flail Mower immediately.
2. Tilt the FR Flail Mower, and lower to a height so that the flails and rotary parts can be inspected.
3. Apply vehicle parking brake, turn of the vehicle, remove the key and make sure that the rotor is stopped completely.
4. Flails and rotor are inspected and checked:
   - When foreign material is found, these are to be removed manually. (Wire fence, plastic etc.)
   - Check flails and rotor for cracks, breakage, and missing parts.

Follow the recommendations below when operating after a shutdown:

- Never run out of oil.
- Never allow a cold machine to run up to speed:
  - The vehicles engine must idle before the attachment tools motor is connected or disconnected.
- Never increase or decrease the engine speed of the vehicle rapidly.
- The condition of the suction hose and pump fittings is checked regularly and tightened.
- The rotor must never be started and stopped at max. revs.
- Avoid sudden movements of the arm via the joystick as well as unevenness in the ground.
  - Changes in pressure are sent back to the pump and might result in failure.
- Avoid the rotor hitting an object, e.g., stone as it will induce pressure changes.
- Never transport the machine while running.
- Never select higher rpm / oil flow than allowed.
- Never work above the recommended engine speed / oil flow.
  - This will result in overheating.

6. INSPECTION AND MAINTENANCE (e, r)

To ensure a long working life of the machine, good and careful maintenance and inspection is required.

The owner or the operator must ensure that the machine is only used, maintained, inspected, and repaired by persons who are familiar with the procedures associated with it and are instructed in the associated hazards.

If doubts arise in connection with any of the mentioned procedures, an authorized specialist workshop or importer should be consulted. (See www.greentec.eu)

Repair work not described in the instruction manual may only be carried out by authorized specialist workshops.

- **INFRINGEMENT OF ONE OR MORE OF THE SAFETY INSTRUCTIONS MAY CAUSE:**

⚠ DANGER	Great danger to persons due to mechanical and chemical influences!
⚠ WARNING	Danger to the environment due to leakage of hydraulic oil! Damage and defects to the machine, tool carrier or power supplying vehicle!
NOTICE	The warranty on the machine is void if the safety instructions are not followed.

6.1 INSTRUCTIONS ON SAFE MAINTENANCE AND ADJUSTMENT (s)

- **TO AVOID ACCIDENTS DURING MAINTENANCE AND ADJUSTMENT THE FOLLOWING MUST ALWAYS BE COMPLIED WITH:**

⚠ DANGER	All maintenance and adjustment on the machine may only be done with the machine stopped, the vehicle switched off, the parking brake applied, and the key removed from the ignition switch! When carrying out maintenance work on the raised attachment tool and / or tool carrier, secure with suitable support elements! Use only suitable tools and use personal protective equipment! Great care should be taken when working with the belt drive and the flails on the attachment tool, as there is a risk of pinching fingers and hands with drive belts, pulleys, knives, and safety guards!

Immediately after completion of work, all safety and protection devices must be fitted and reapplied!

During maintenance, you will often encounter hydraulic oil, gearbox oil and grease. Always avoid skin contact, inhalation, etc!

⚠WARNING

Always use the correct protective equipment!

Dispose of oil and grease properly!

6.2 DAILY AND ROUTINE MAINTENANCE (e)

NOTICE

Always remember to check all machinery, including the vehicle and tool carrier on which the attachment tool is mounted.

It is important that the operator knows the machines and performs the inspections necessary for the vehicle, tool carrier and the attachment tools used.

Instructions for use for the respective machines must always be used for inspection. Be confident in your daily routines.

⚠CAUTION

Before starting up a new machine, a general daily inspection is carried out before start-up, and after each 3-5 operating hours!

Extra attention should be paid to safety guards, loose bolts, and belt tension!

DAILY INSPECTION OF MACHINE – BEFORE OPERATION:	
Inspection is carried out after the first 3-5 operating hours. Here on after, inspections must be performed daily / after each use of the machine.	General overall impression of the machine. • (Any damage and / or errors must be rectified immediately) Intact safety guards (front and rear rubber flaps) + belt housing must be intact. Cracks in the sides, corners and around the mounting bracket on the frame. • Dents and bent parts. Loose parts or missing bolts. • Tighten all bolts, incl. the flail bolts. Check belt tension and retighten the belt. Inspect the hydraulic system for engine leaks + hydraulic fittings and hoses. Check hydraulic hoses and hose stockings for proper fitment. • Wear marks and displaced stockings. Lubrication of all lubrication spots. • Best done after finished operation, as the bearings will be hot and possible water / moisture is forced out of the bearing.

Table 13 – Checklist for daily inspections before operation: FR Flail Mower

SEMI-ANNUAL INSPECTION – PREVENTIVE MAINTENANCE:	
Inspections are carried out after the winter / summer season. Inspections are reviewed semi-annually.	Carefully check the condition of all hoses. • Make sure that they do not rub against edges, beams, bolts and alike. • The hose stockings are correctly fitted, so that the hoses are always protected as best as possible. Clean the entire machine of loose branches and dirt + wash and lubricate the machine with anti-corrosion oils. • Especially on the polished parts / areas of the machine. (e.g., flails / blades) • Make a daily inspection (See Table 13 – page 38) Store the machine at a dry and well protected place. • Protect bearings and hydraulic couplings against persistent rain, moisture, and temperature fluctuations.

Table 14 – Checklist for semi-annual inspection - preventive maintenance.

6.3 TIGHTENING OF BOLTS AND HYDRAULIC CONNECTIONS

6.3.1 TIGHTENING OF BOLTS

- All bolts and nuts are provided with quality class marking, ordinary machine steel bolts have quality class 8.8.
  - Bolts are marked with 8.8, and nuts are marked with 8.

- Hardened steel bolts may have a mark of 10.9 or 12.9.
  - Bolts are marked with 10.9 or 12.9, and nuts marked with 10 or 12.

- Some bolts and nuts have no markings.
  - These are always ordinary steel bolts and / or nuts in class 8.8 / 8.

TIGHTENING TORQUES FOR BOLTS: FR FLAIL MOWER ISO metric standard: bolt qualities					
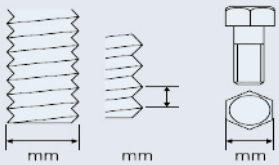 mm	mm	mm	Tightening torques (**Nm**)		
			Ordinary steel bolts (Strength class 8.8)	Hardened steel bolts (Strength class 10.9)	Hardened steel bolts (Strength class 12.9)
M6	1,00	10	11,3	16,5	19,3
M8	1,25	13	27,3	40,1	46,9
M10	1,50	16	54,0	79,0	93,0
M12	1,75	18	93,0	137,0	160,0
M14	2,00	22	148,0	218,0	255,0
M16	2,00	24	230,0	338,0	395,0

Table 15 – Tightening torques for bolts: FR Flail Mower

6.3.2 TIGHTENING OF HYDRAULIC CONNECTIONS

- The hydraulic couplings used, are all with metric threading.

  - Unlike inch threading, there is a finer threading, which gives a significantly stronger and denser connection, with less tightening,

- There are two series of bolts with metric threading: Light-series (L) and Heavy-series (S)

  - The light series (L) is used in most places where the pressure does not exceed 250 bar.
  - The heavy series (S) is used on hydraulic connections / fittings where the pressure exceeds 250, up to 320 bar.
  - The designation of the hydraulic connections appears on the collar of the screw fittings.



Hydraulic fittings (M30) with designations:
S20 (left) and L22 (right)



Hydraulic screw connection: S-series (left)
Hydraulic screw connection: L-series (right)

TIGHTENING TORQUES FOR HYDRAULIC FITTINGS: FR FLAIL MOWER		
Hydraulic fittings (± 5%)		
Threading:	Series:	Tightening (**Nm**):
Light series:		
M14	L 8	**35**
M16	L 10	**55**
M18	L 12	**65**
M22	L 15	**90**
M26	L 18	**125**
M30	L 22	**150**
M36	L 28	**220**
M45	L 35	**380**
M52	L 42	**580**
Heavy series:		
M24	S 16	**125**
M30	S 20	**220**
M36	S 25	**300**

Table 16 – Tightening torques for hydraulic fittings: FR Flail Mower

6.4 HYDRAULIC HOSES

⚠ WARNING

When searching for leaks, due to danger, suitable aids must be used: goggles, work gloves + a piece of cardboard that quickly makes a leak visible!

Thin jets of hydraulic oil under high pressure can penetrate the skin and cause serious injuries!

In the event of injuries of this kind, seek medical attention immediately:
DANGER OF INFECTION!

- Check the condition of all hoses for regular inspections. Pay special attention to the fact that they do not rub against edges, beams, bolts, etc., and that the sock is correctly fitted so that the hoses are always protected as best as possible.

- Check all hydraulic hoses and fittings daily. Any damage or leak must be repaired immediately. Hoses with defective metal bands must be replaced.

- GreenTec's hydraulic systems operate at a very high pressure. Use only original hoses. A broken hose can be very dangerous.

- When replacing hydraulic hoses, avoid twisting hoses and fittings:
  - Use 2 wrenches to loosen and tighten the hoses!
  - Avoid over-tightening!
  - If fittings continue to leak, they **must** be replaced!

⚠ WARNING

A flexible hose must not be twisted during installation, as this significantly reduces the life of the hose and can cause the connections to loosen.

To determine if a hose is twisted or not, the specification line running along the length of the hose must be straight.

If the specification line spirals around the hose, the hose is twisted:



⚠ WARNING

A flexible hose must never be stretched tightly between two fittings.

Approx. 5 to 8 percent of the total length should be allowed as slack to allow free movement under pressure.

Under pressure, flexible hose is pressed lengthwise and widened in diameter.

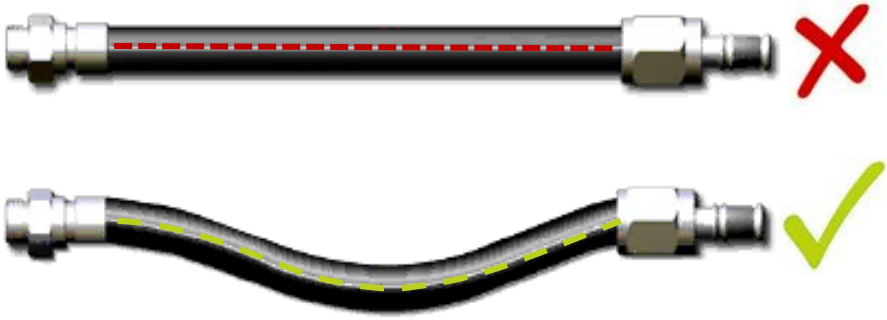

NOTICE

The hydraulic hose warranty is limited to hose replacement due to defective material or fabrication. The hose warranty is void if::

- Hoses are damaged due to wear and tear.
- If the hoses have been cut or pinched during work.
- If the thread is damaged due to over-tightening

Hydraulic hoses must be tightened according to Tabel 16 – side 41.

6.5 LUBRICATION OF THE FR FLAIL MOWER

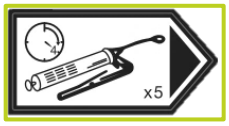

All 4 lubrication points on the machine are marked with the following mark:

- Lubrication must take place after every 4 hours of work.
- For each lubrication, approx. x5 pressure from a standard grease sprayer.
  - Always stop when significant resistance is felt or when grease is coming from the lubrication point.

⚠CAUTION

GreenTec ALWAYS recommends using a manual hand sprayer to lubricate the FR Slagleklipper! Grease sprayers with compressed air and the like. can damage gaskets around the bearings!

NOTICE

GreenTec ALWAYS recommends lubrication after the end of the work cycle for the machine, as the lubrication points that have been most heavily loaded are still hot, and possibly. dirt, acid, moisture, water and grass are therefore pressed out immediately.

The 4 lubrication points of the FR Flail Mower is marked below:

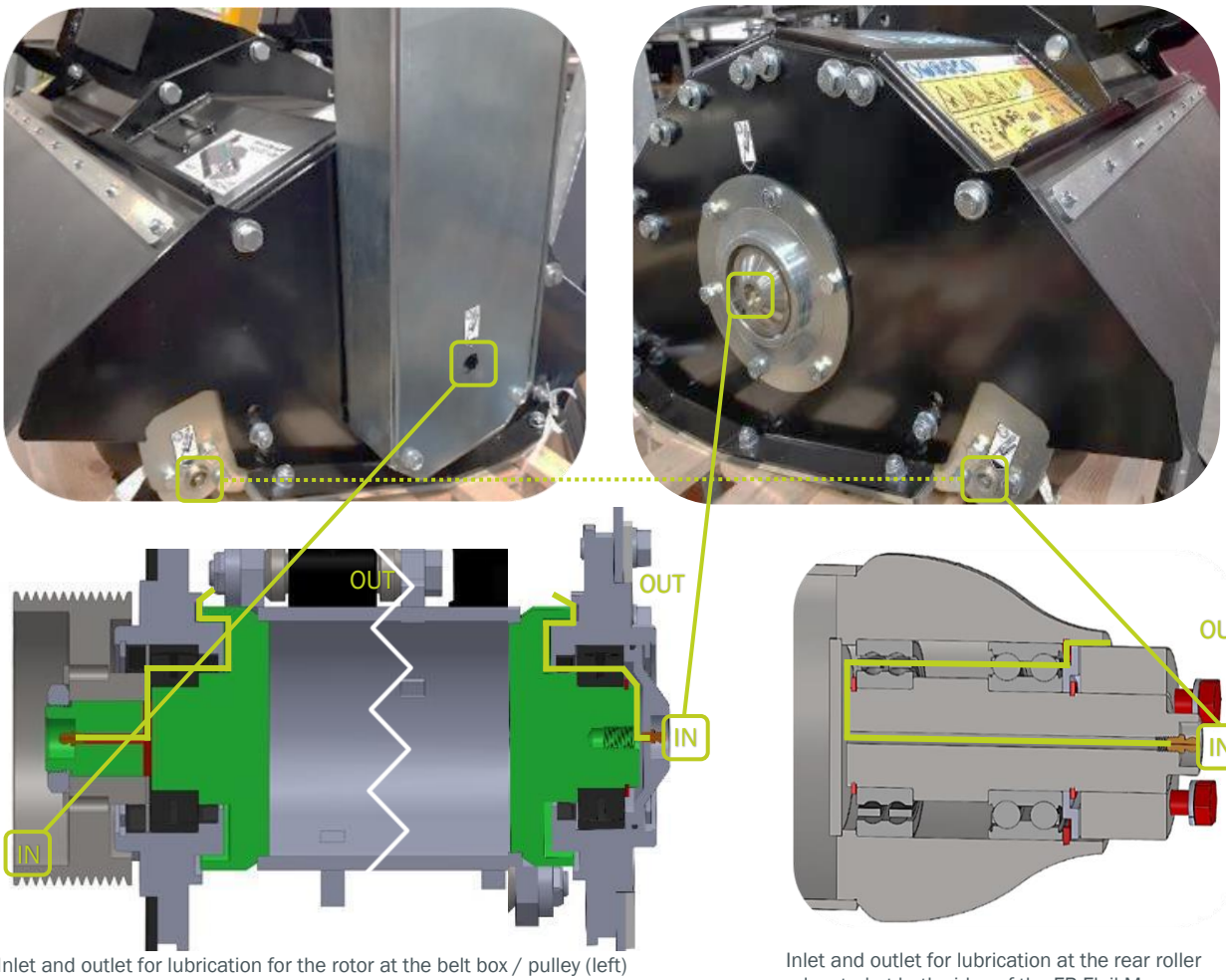

Inlet and outlet for lubrication for the rotor at the belt box / pulley (left)
Inlet and outlet for lubrication for the rotor opposite the belt box / pulley (right)

Inlet and outlet for lubrication at the rear roller – located at both sides of the FR Flail Mower

6.6 ADJUSTMENT AND REPLACEMENT OF BELT ON FR FLAIL MOWER

DANGER

Great care should be taken when working with the belt drive, as there is a risk of fingers and hands getting pinched by the drive belt and pulleys!

BELT TENSION ADJUSTMENT:

1. Remove the 4 bolts on the belt housing cover and then remove the cover.



2. The 4 bolts holding the hydraulic motor must be loosened easily so that the motor suspension can be displaced in the elongated holes.

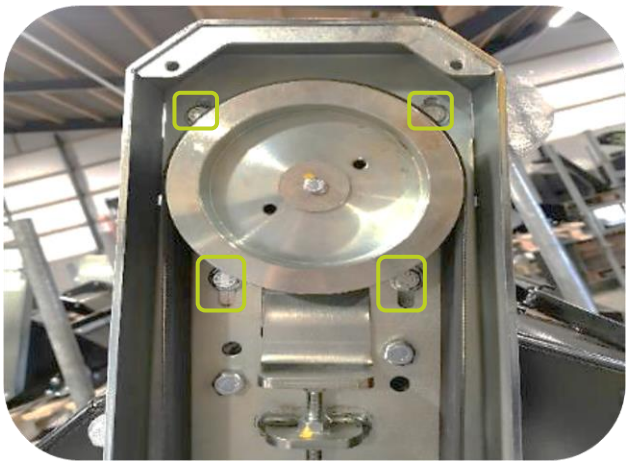

3. Replacement or adjustment of belt:
   - When replacing the belt: loosen the lock nut and belt tensioner bolt completely.
   - When adjusting the belt: loosen og tighten the belt using the belt tensioner bolt.

(Continued) →

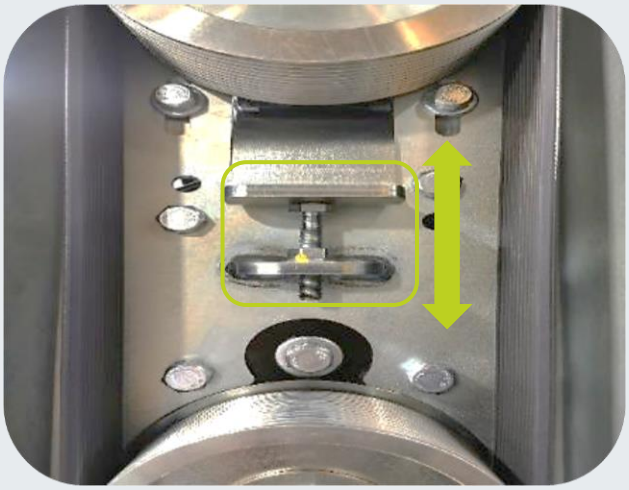

4. Tighten the 4 bolts lightly. (See step 2)

5. Turn the belt pulley 3 times so that the tension is evenly distributed over the entire belt.

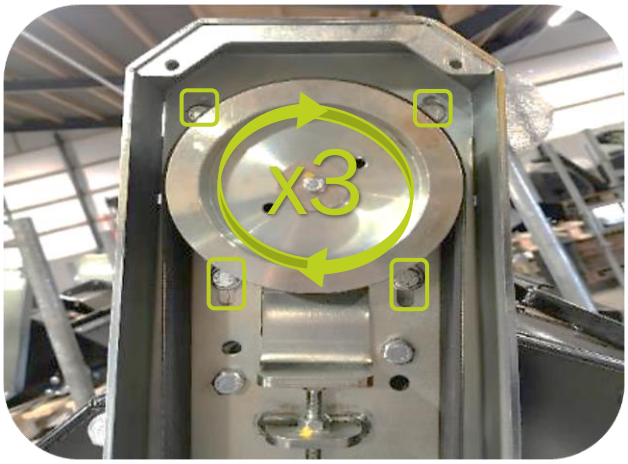

6. Use the supplied belt tension gauge in the center of the belt, as shown below in step 7.
   - Instructions for use are included with the belt tension gauge and further technical data can be found here: (OPTIKRIK Tension Gauge)
   - Below are prescribed the recommended belt tensions for the FR Flail Mower:



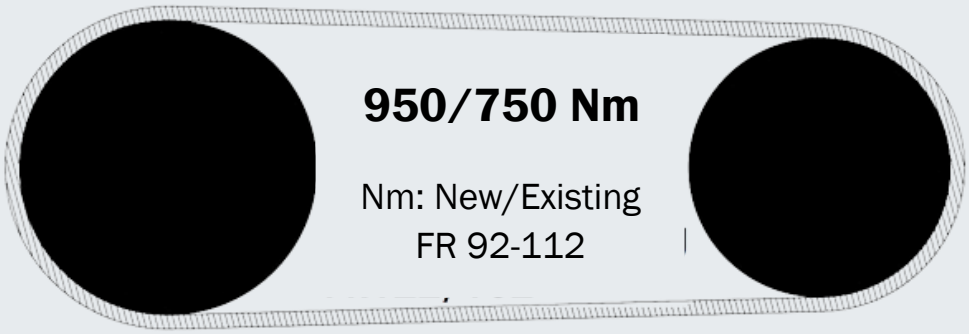

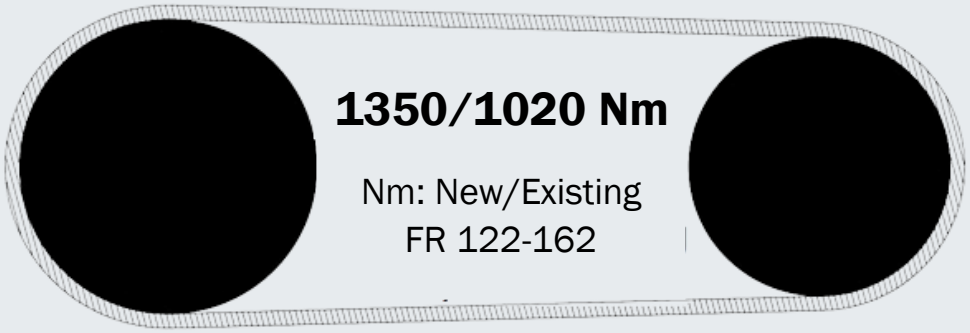

(Continued) →

GREENTEC
Cutting Edge Technology

MADE IN DENMARK

7. Press the belt tension gauge until a “click” is felt, and then read the tension value.

   - **Remember** that the tightening is different, depending on whether it is a new or used belt.
   - The correct tightening torques can be found in the FR Flails Mowers datasheet.
     (See Table 8 – page 21)

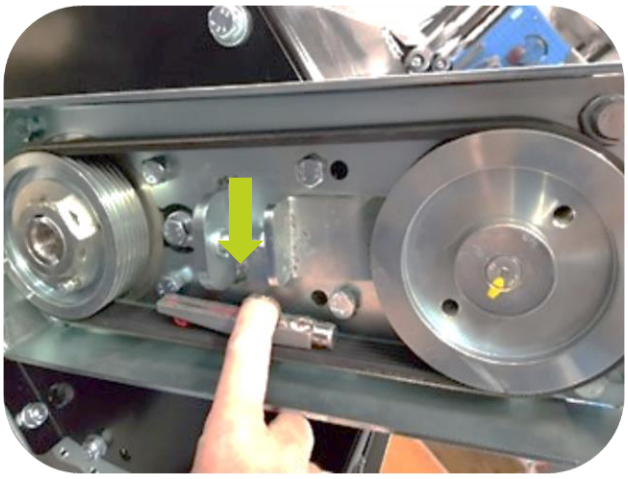

8. To set the tension, adjust the belt tensioner bolt until prescribed tension is reached.

   - Perform continuous measurement / testing with the belt tension gauge.



9. When the prescribed tension of the belt is reached:

   - Turn the belt/pulley once and take another measurement / test with the belt tension gauge.
   - Repeat the measurement / test 2-3 times for quality assurance of the reading.

(Continued) →

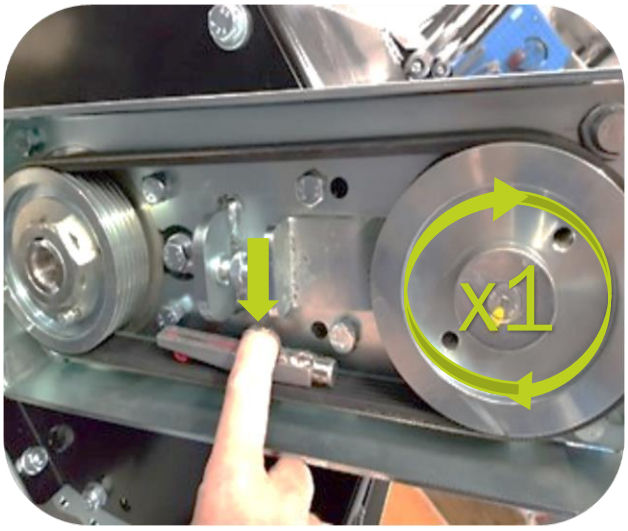

10. Tighten the 4 bolts. ○ Tighten the bolts according to Table 15 – page 39.	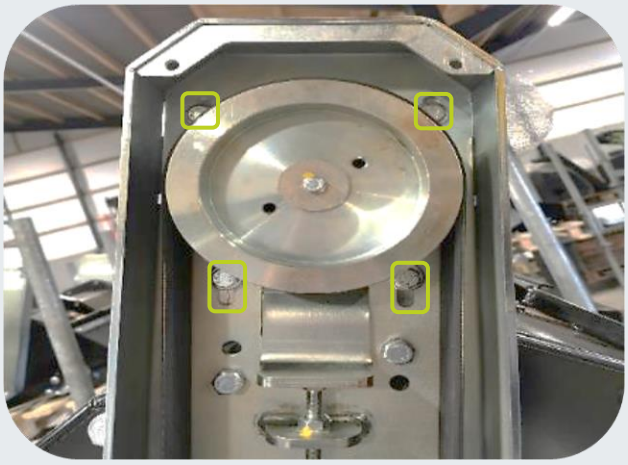
11. Test again with the belt tension gauge that the belt is still tightened with the prescribed value.	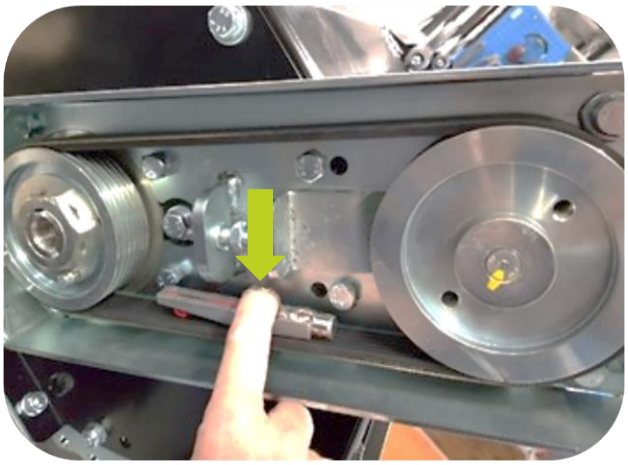
12. Fit the belt housing lid / cover and tighten the 4 bolts. ○ Tighten the bolts according to Table 15 – page 39. ○ Remember to turn the hole for lubricating the machine down so that the rotor bearing can be lubricated.	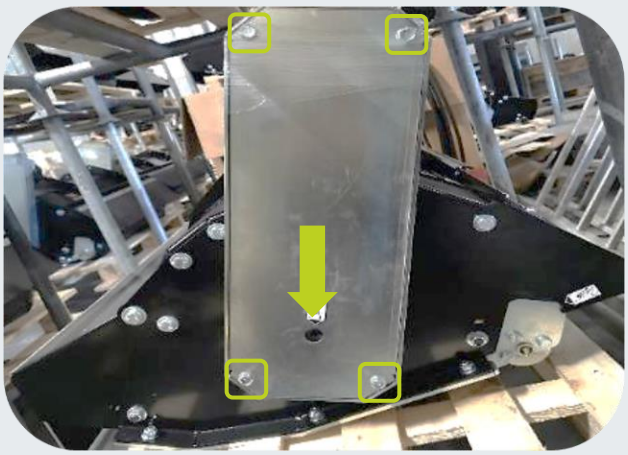

Table 17 – Guide for belt adjustment on FR Flail Mowers

⚠CAUTION

ALWAYS REMEMBER to retighten the belt to see if it is new or driven.

Always observe the prescribed belt tightening values on the machine to avoid faulty conditions.

GREENTEC Cutting Edge Technology

MADE IN DENMARK

6.7 REPLACING THE FLAILS ON THE FR FLAIL MOWER

- There are 3 types of flails, in 2 different sizes: See Table 6 – page 17.
- To see which flails are suitable for your specific machine: See Table 8 – page 21.
- All flails are mounted with 1 bolt and a nut in strength class 10.9, and 2 pcs. bushings:

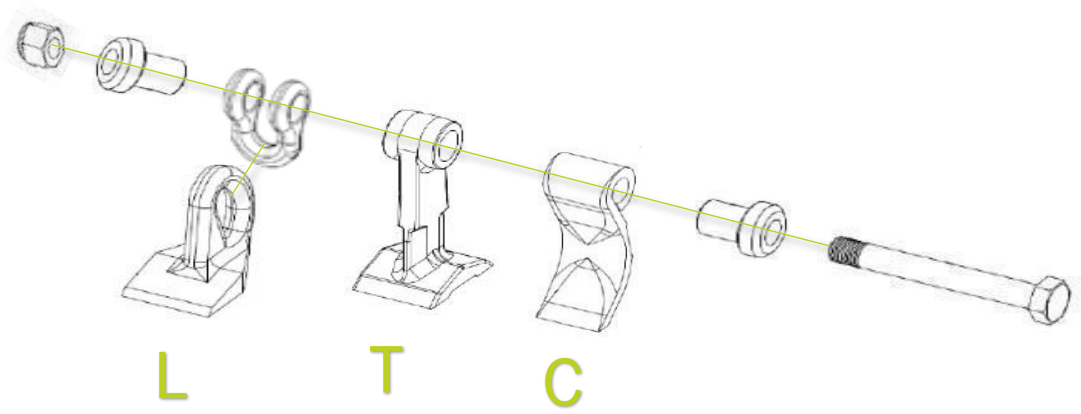

Mounting sequence - change of flails: FR Flail Mower

- Rotoren rotor is balanced with the flails mounted from the factory, to provide the best and safest balance.
- If a flail breaks / bends, the flail(s), bolt, and nut must all be replaced.
  - When replacing the flails, bolts must be tightened according to Table 15 – page 39.
  - It is recommended that all flails are replaced at once together with bolts, bushings, and nuts.

⚠CAUTION

If an almost new flail is damaged, min. 2 flails at a time is replaced, and it MUST be flails that sit directly opposite each other on the rotor!

This will shift the weight balance minimally and vibrations are reduced!

⚠DANGER

Always use original bolts and spare parts to ensure adequate strength!

Check and retighten the bolts at the flails, especially in the first days after assembly / replacement, so that they do not loosen and drop!

- When replacing / repairing flails, make sure to mount the bolt and nut in the same direction:
  - The flails can risk hitting each other, and there by deforming the nut and bolts at the end with threads.
  - In the event of damage, replace both the bolt, nut, and bushings.

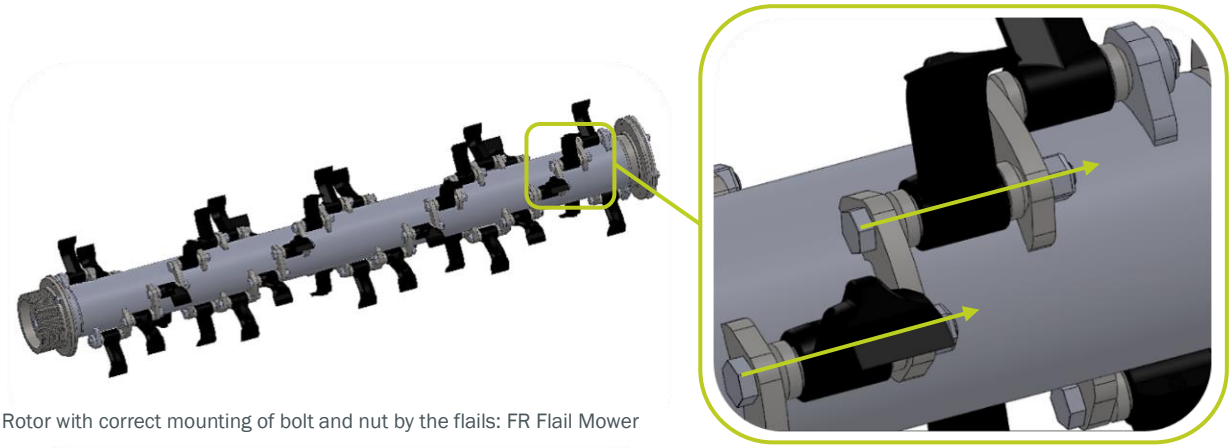

Rotor with correct mounting of bolt and nut by the flails: FR Flail Mower

6.8 REPLACING THE BEARINGS ON THE FR FLAIL MOWER

- In the event of increased vibration, noise level, play and / or excessive heat development, the bearings on the machine must be inspected and possibly replaced.
- The FR Flail Mower has the following bearings:

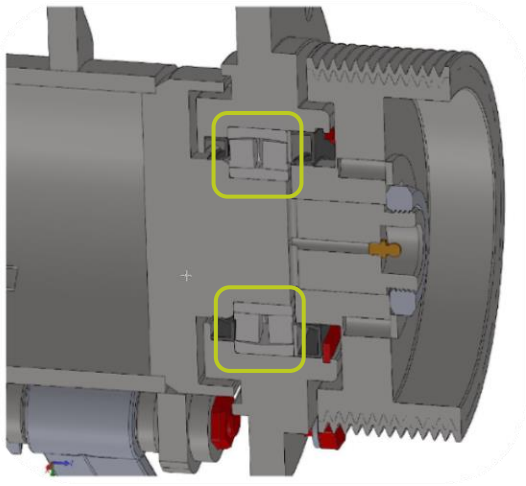

Rotor bearings: The bearings in the rotor consist of spherical roller bearings.

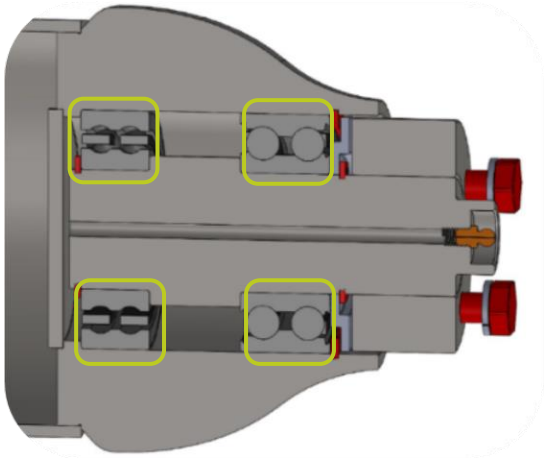

Rear roller bearings: The bearings in the rear roller consist of double-row ball bearings.

NOTICE

Change of bearing and replacement of internal parts on the FR Flail Mower should always be carried out by an authorized professional.

- Further information can be found on GreenTec's website or by contacting the GreenTec Aftersales-department.

6.9 STORAGE OF THE MACHINE

- Never store the machine unprotected from moisture, wind, and weather. Before storing the machine, it must be washed thoroughly. Remove all traces of leaves / branches and dirt.

⚠CAUTION

Be careful when using a high-pressure cleaner close to the paintwork! Steam cleaner is used with great care!

Avoid tougher cleaning agents to avoid discoloration or damage to the paint!

It is important to keep the machine covered so that it is protected from rain and sunlight.

It must be placed horizontally on a level surface or pallet!

When storing the machine, make sure that there is no risk of it tipping over or falling down.
Make sure about a suitable storage location or support of the machine!

Lubricate the machine in anti-corrosion oil afterwards, especially on the worn parts such as blades, rotors and internal guards. This minimizes rust formation and significantly prolongs durability!

DANGER	Anti-corrosion oils are dangerous on the skin and by inhalation! Know and use all safety instructions when using the oil!
NOTICE	Do not leave hydraulic hoses on the floor. They pose a tripping risk! Lay all hoses over the machine / tool.
NOTICE	Always keep the machine and work tools in a clean condition! Dirt attracts moisture and can result in increased rust formation. Paint damage must be repaired!
CAUTION	The machine MUST be stored dry, due to the risk of water in the bearings.

- Remember, that the machine is designed to withstand the harshest conditions, and that with a little care and attention it will be able to give you many years of trouble-free operation.
- To avoid problems and ensure that the warranty covers, always use original parts and make sure that the machine is not used for anything other than described in this instruction manual.

6.10 DISPOSAL OF MACHINE / MACHINE PARTS:

NOTICE	To ensure the most environmentally friendly disposal method, the machine must be disassembled and the disassembled parts sorted into the following categories:

CATEGORY:	DESCRIPTION:
Rubber and plastic parts	Hoses, rubber flaps, support wheels, plastic components, etc.
Technical components	Motors, hydraulic hoses, etc.
Metal	Plates, profile pipes, tubes, bearing housings, knives, pulleys, etc.
Fluids	Hydraulic - /bio oil:

Table 18 – Overview of disposal / scrapping of machine parts.

7. TROUBLESHOOTING: FR FLAIL MOWER

7.1 TROUBLESHOOTING PROCEDURES

In case the machine or vehicle does not work properly, see the instruction manual for these.
When locating the source of an error, first isolate the error condition as a result:

- Is the condition of error mechanical?
- Is the condition of error hydraulic?

PROBLEM:	CAUSE:	SOLUTION:
Poor result of cutting	Worn flails.	Replace worn slag.
	Driving too fast.	Reduce speed.
	Rotor speed to low.	Check and adjust oil flow.
	State of vegetation.	Find suitable conditions. (Possible change to other types of flails)
	Foreign material in rotor. (Wire, plastic, and other waste)	Remove material and clean the rotor.
Rotor vibrations	Wire / cord in / around rotor bearing.	Remove wire / string and check bearings and stuffing boxes.
	Lack of maintenance.	Lubricate bearings as recommended.
	Flails cracked or missing.	Replace flails.
	Bearing(s) worn or damaged.	Replace bearing(s).
	Rotor bent.	Rotor is balanced / replaced.
	Incorrect rotor speed.	Check rotor speed.
Heavy belt wear	Condition of belt and pulley.	Replace if necessary.
	Incorrect belt tension.	Check belt tension.
	Belt is loose	Tighten belt according to regulations.
Hydraulic oil overheating	Machine overload.	Reduce forward speed or increase cutting height
	Machine overload.	Reduce forward speed or increase cutting height.
	Check cooler for dirt and grime.	Clean cooler when clogged.
	Ambient temperature too high.	Install an oil cooler and / or reduce the working speed.
	Too high oil flow from the pump.	Reduce the speed of the PTO / pump.
Engine failure	There can be many causes of engine failure: Cavitation, pollution or excessive oil pressure on the return or drain hose.	Never run out of oil.
		Never allow a cold machine to run up to speed quickly. The pump must be idling before the machine is started / stopped.
		Avoid the rotor hitting an object, e.g., manhole covers, tree stumps etc., as it will cause pressure changes.
		Stop engine immediately if rotor vibration occurs.

Table 19 – Identifications of errors: FR Flail Mower

NOTES:

GREENTEC
Cutting Edge Technology

MADE IN DENMARK

GREENTEC
Cutting Edge Technology

MADE IN DENMARK

ALL RIGHTS RESERVED BY GREENTEC.

THE ORIGINAL CONTENTS OF THE INSTRUCTION BOOK CREATED BY GREENTEC MAY NOT BE REPRODUCED, TRANSCRIBED OR TRANSLATED, WITHOUT WRITTEN PERMISSION FROM GREENTEC.

2021 – GREENTEC

GREENTEC

MADE IN DENMARK

Merkurvej 25 | DK-6000 Kolding | Tel.: +45 75 55 36 44 | info@GreenTec.eu | www.GreenTec.eu

Cutting Edge Technology